FEMAP Techical Overview

C.R. "Chip" Fricke

UGS Corp.

Femap Applications Engineer

chip.fricke@ugs.com

(408) 941-4637

Premium Partners:

Agenda

- Femap Modeling Overview
- UI Customization to Improve Workflows
- Modeling Approaches
- Femap v9.2 Enhancements

Femap Modeling Overview

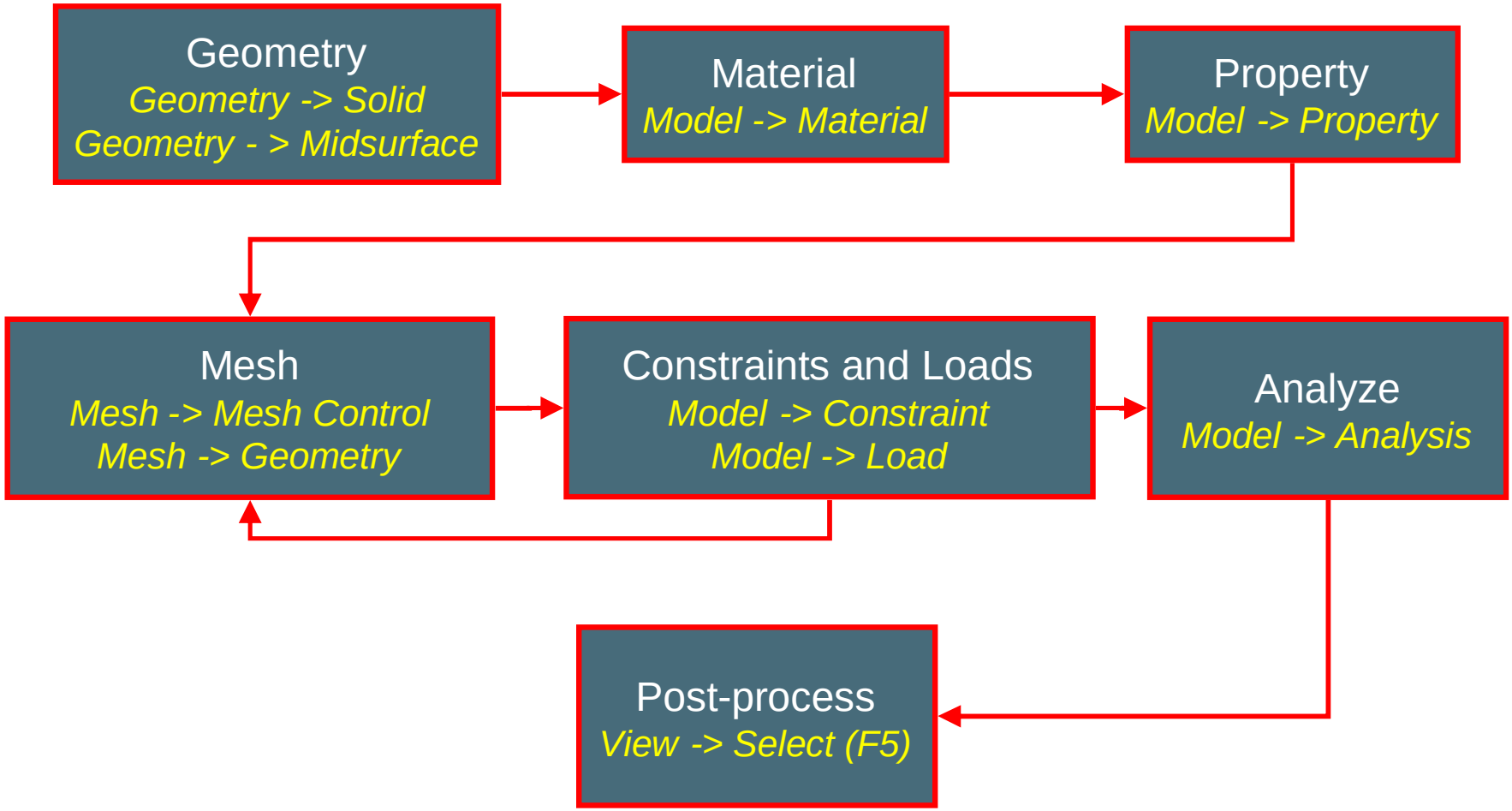

UI Customization to Improve Workflows

- Use of custom toolbars, menus, API scripts, and Program Files (macros) can automate and standardize modeling processes in Femap
- Example – Multi-thickness body using Midplane modeling

Multi-thickness Midsurface Body Creation Process

1. Extract midsurfaces with ***Geometry -> Midsurface -> Automatic*** command
2. Activate and display midsurface group
   - Use the ***Group -> Operations -> Automatic Add*** command to automatically update the active group as you work on the midplane body
   - Add the Sheet Solids created to the midsurface group
3. Trim surfaces if needed on midplane body with ***Trim –> With Curve*** midsurface command
4. Clean up resulting bodies with the ***Geometry -> Solid -> Cleanup*** command
5. ***Assign Mesh Attributes*** to the midplane surfaces
6. Intersect surfaces with the ***Intersect*** midsurface command

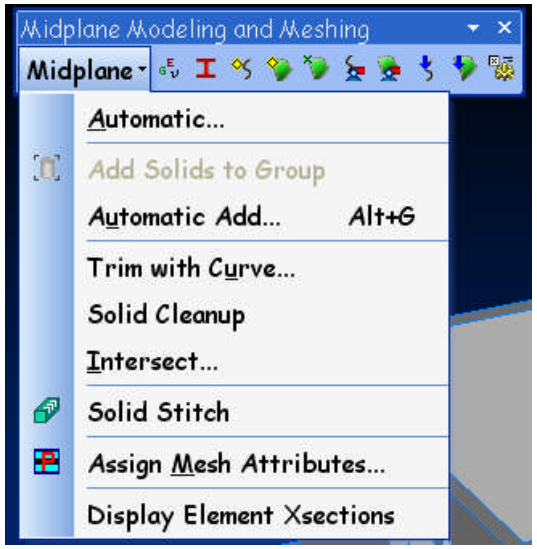

Modeling Approaches

- User's role and simulation goals may effect approach to modeling
- Demo Example – Lever Arm
  - Designer – uses Tet Mesh to quickly understand load paths and stress concentration factors
  - Engineer – uses Hex Meshing to reduce model size and solution time
  - Analyst – uses combined Hex and Shell model to further reduce model size and enable rapid design iterations

FEMAP v9.2 Enhancements

- UI enhancements
- Automatic mesh sizing on solids
- Contact modeling
- Extended surfaces
- Results data mapping

Femap v9.2 UI Enhancements

- Tabbed dialog boxes
- Preferences updated to include startup scripts and macros

Femap v9.2 Contact Modeling

- ***Connect*** menu
  - replaces ***Model -> Contact*** commands
- "Glued" contact with NX Nastran 4.1 solver

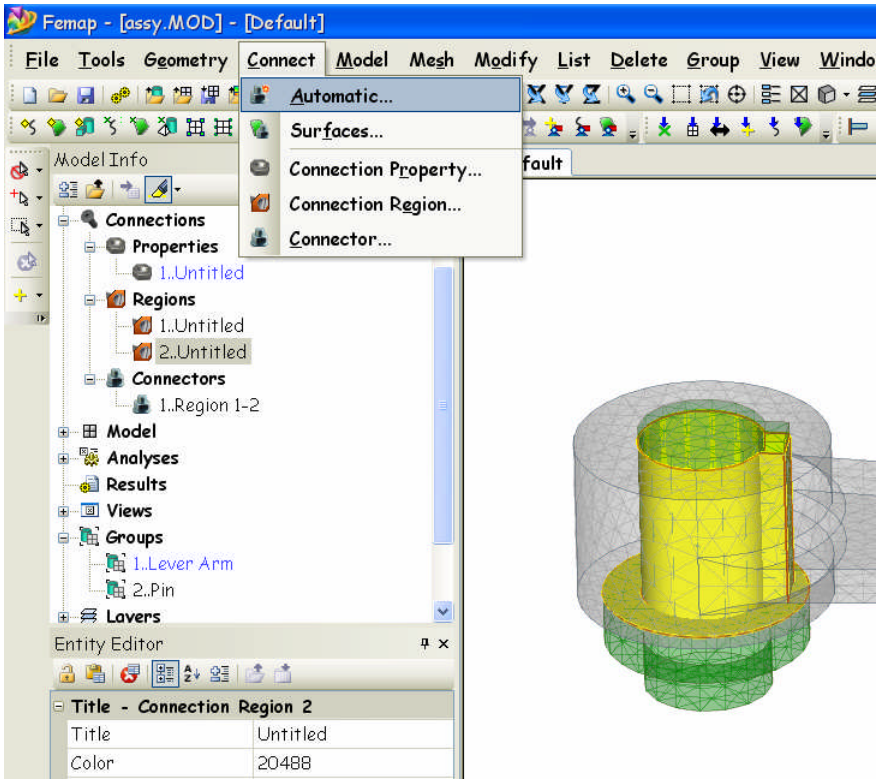

Extended Surfaces

- ***Geometry -> Midplane -> Extended Surfaces*** command
  - Use to extend surface to intersections with:
    - Solid
    - Specific location
    - Specified distance
  - Works on sheet bodies and surfaces only

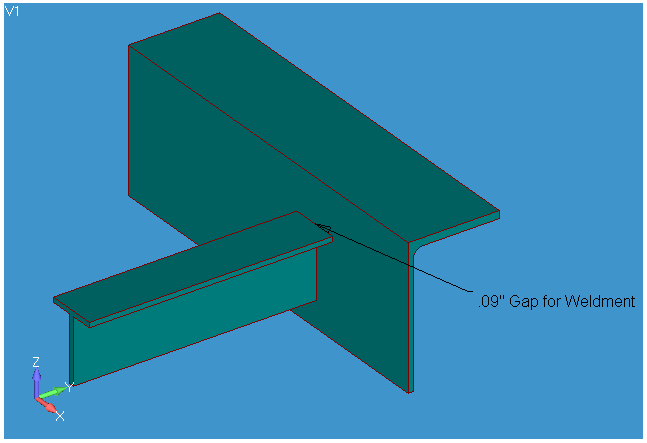

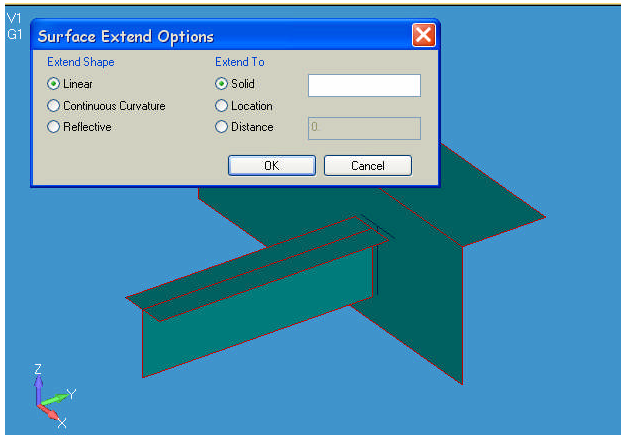

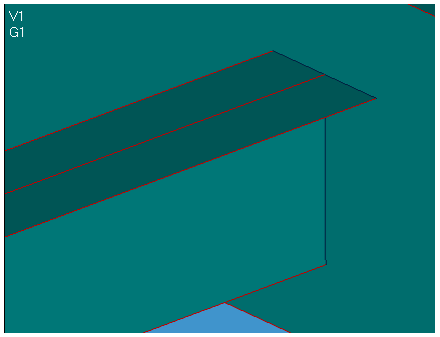

Results Data Mapping

- ***Model -> Load -> Map Output from Model*** command maps results from one model and output set as a load into a second model
  - Global / local analysis coarse to fine mesh
  - Temperature mapping from coarse thermal to fine structural mesh
  - CFD pressure mapping to structural meshes

Thank You!