MASCO Design Services Pty Ltd

"When the Crunch Comes."

Quite often we think we've done a brilliant job of our designs UNTIL we push the **Start** button ... then "the crunch" comes!!!

Presenter: *Rick Mason, Director*

PLM University, May 2006 - Long Beach, California, USA

MASCO Design Services ...

operates from Sydney, Australia

- Established in 1982 and has specialised in parametric Computer Aided Design since 1985.
- Provides specialised 3D Modelling & design to Toolmakers, Manufacturing businesses, Moulders, Rapid Prototyping suppliers, other Designers and many other businesses.
- Uses ‘state of the art’ parametric solid modelling and powerful 3D graphics workstations networked to broadband internet to work effectively with customers anywhere in Australia ... or around the world.
- Solid Edge user since Version 1.0 (1996)

- We model ‘little bits’ …

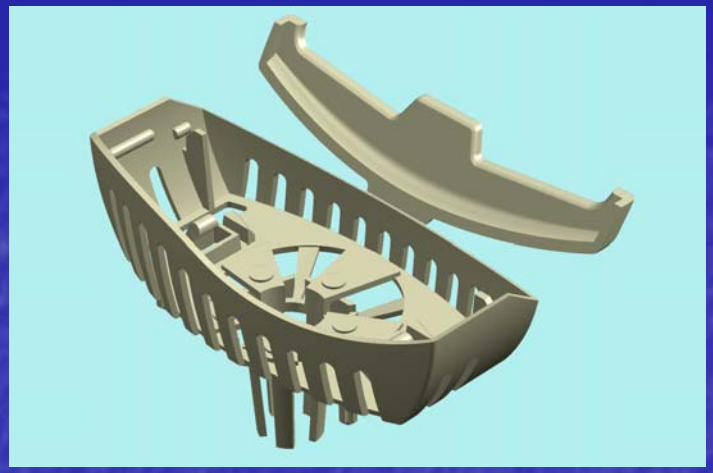

- And we model **‘BIG’** bits …

(MASCO provided the 3D computer modelling and detail documentation for The Australian War Memorial, London in 2003 – all done with Solid Edge)

- And some memorable bits …

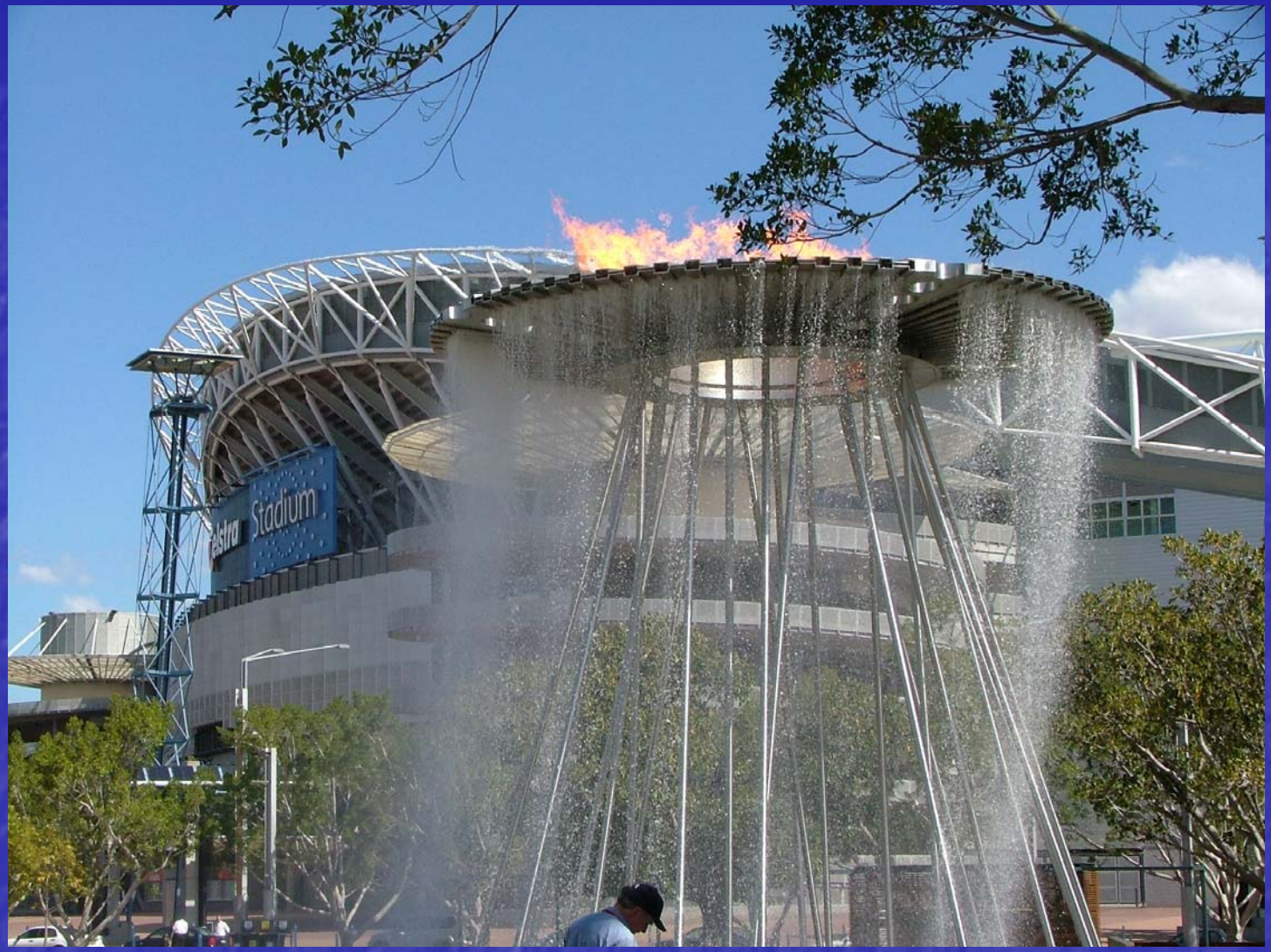

Re-modelling of the Sydney 2000 Olympic Cauldron as a permanent attraction was done by MASCO using Solid Edge. The cauldron now stands on a random structure of 24 stainless steel pipes which carry gas, air, water and electrical services to the burner and nozzle array.

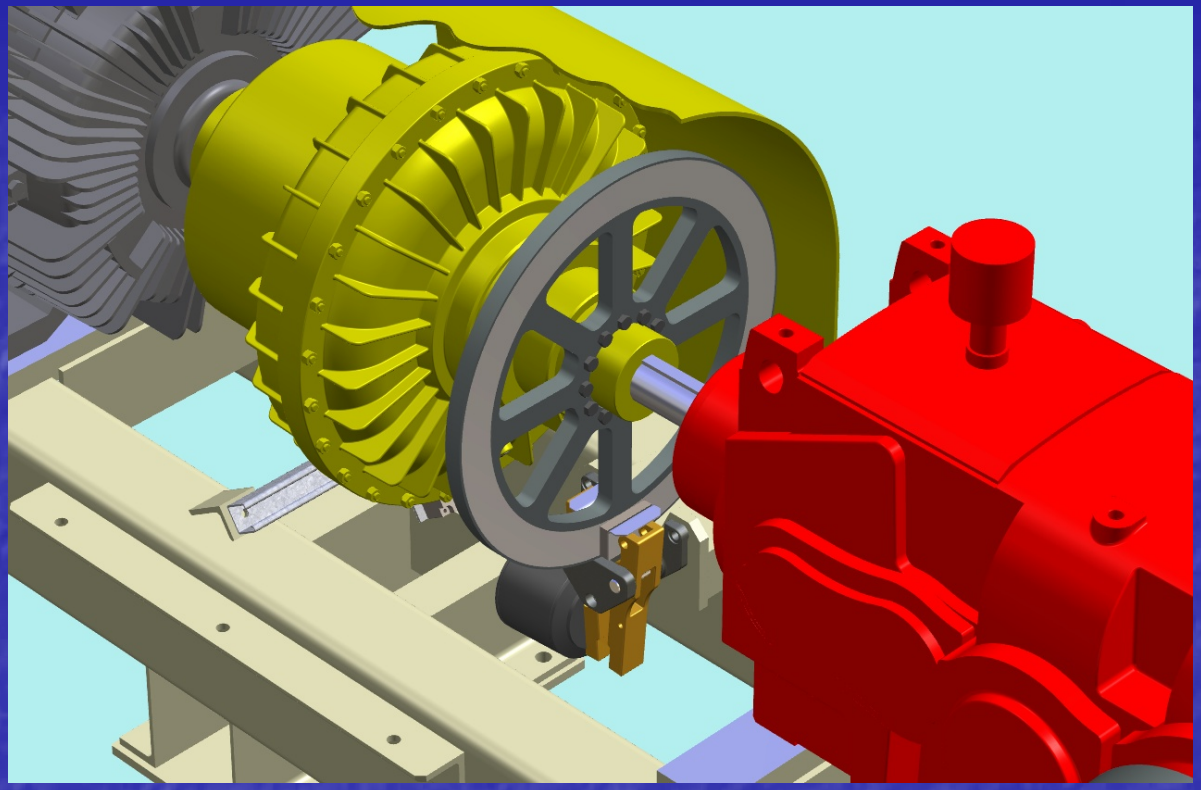

Solid Edge, like most other MCAD modelling software, allows us to create quite complex mechanisms - but it is easy to get lulled into thinking that everything fits and works perfectly just because it looks good on the screen!

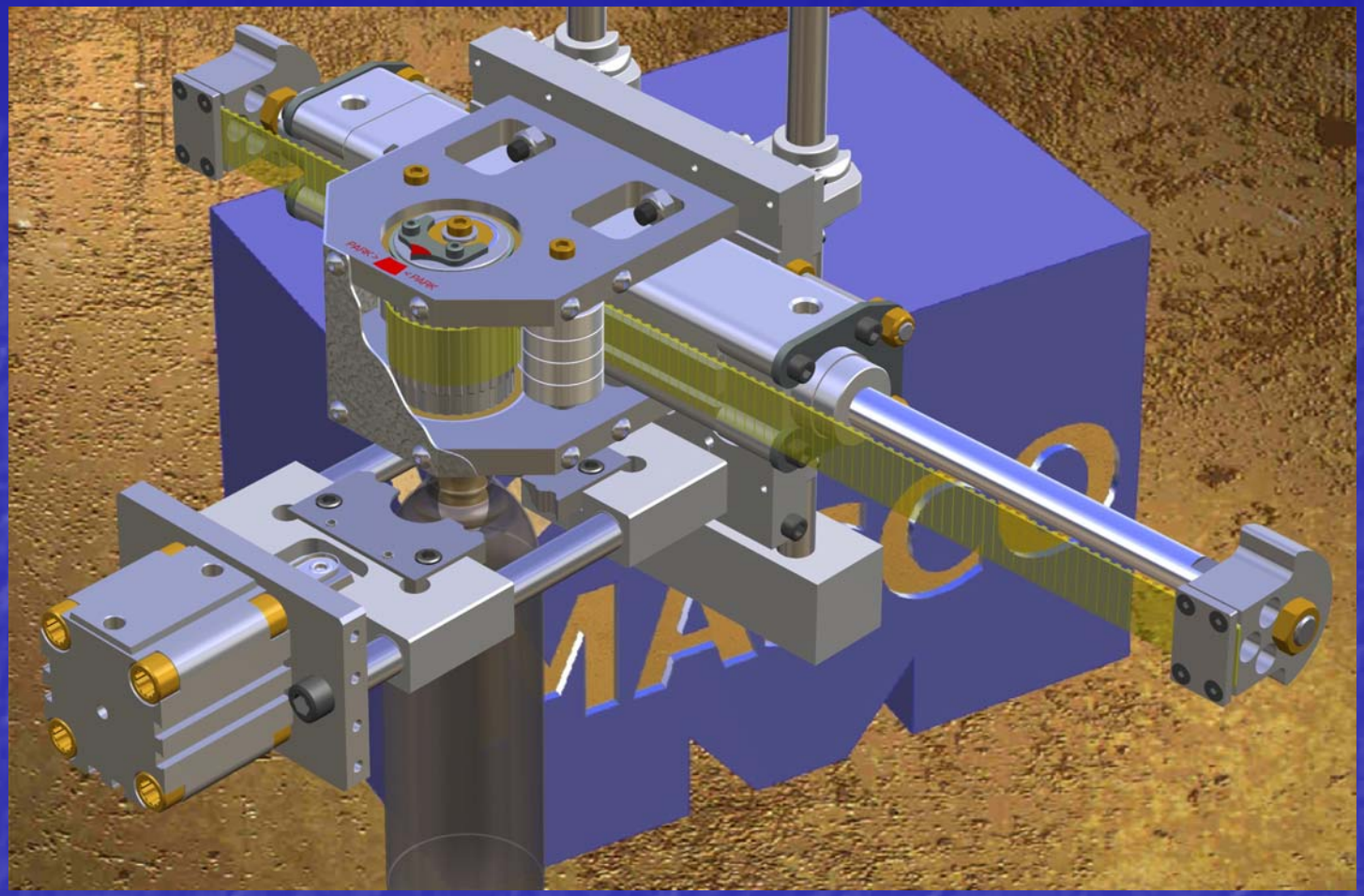

One of the biggest dangers in designing in Solid Edge is that the model is ‘perfect’ – whereas the reality is quite different! Mechanisms which look entirely plausible on the screen may be the stuff of nightmares in the workshop ... as we regularly prove.

Case Study: Turf Aerator Assembly (Tractor-mounted)

Our Customer had built a prototype which didn't meet expectations ...

Problems:

- Vibration
- Shaft breakages
- Difficult assembly/ maintenance
- High part-count
- Poor rearward vis-ibility for operator

The Mission:

- Import 3D data from Cadkey
- Re-assemble in Solid Edge
- Identify areas requiring redesign
- Identify clearance/fouling issues (both when running & during assembly/maintenance
- Improve balancing at maximum operating revs.
- Reduce part-count, machining etc. where possible
- Reduce profile to improve operator's rearward vision
- Simplify timing-belt fitting/change & tensioning
- Reduce weight & material costs wherever possible.

Who ordered spaghetti???

The Cadkey assembly was almost 100MB!

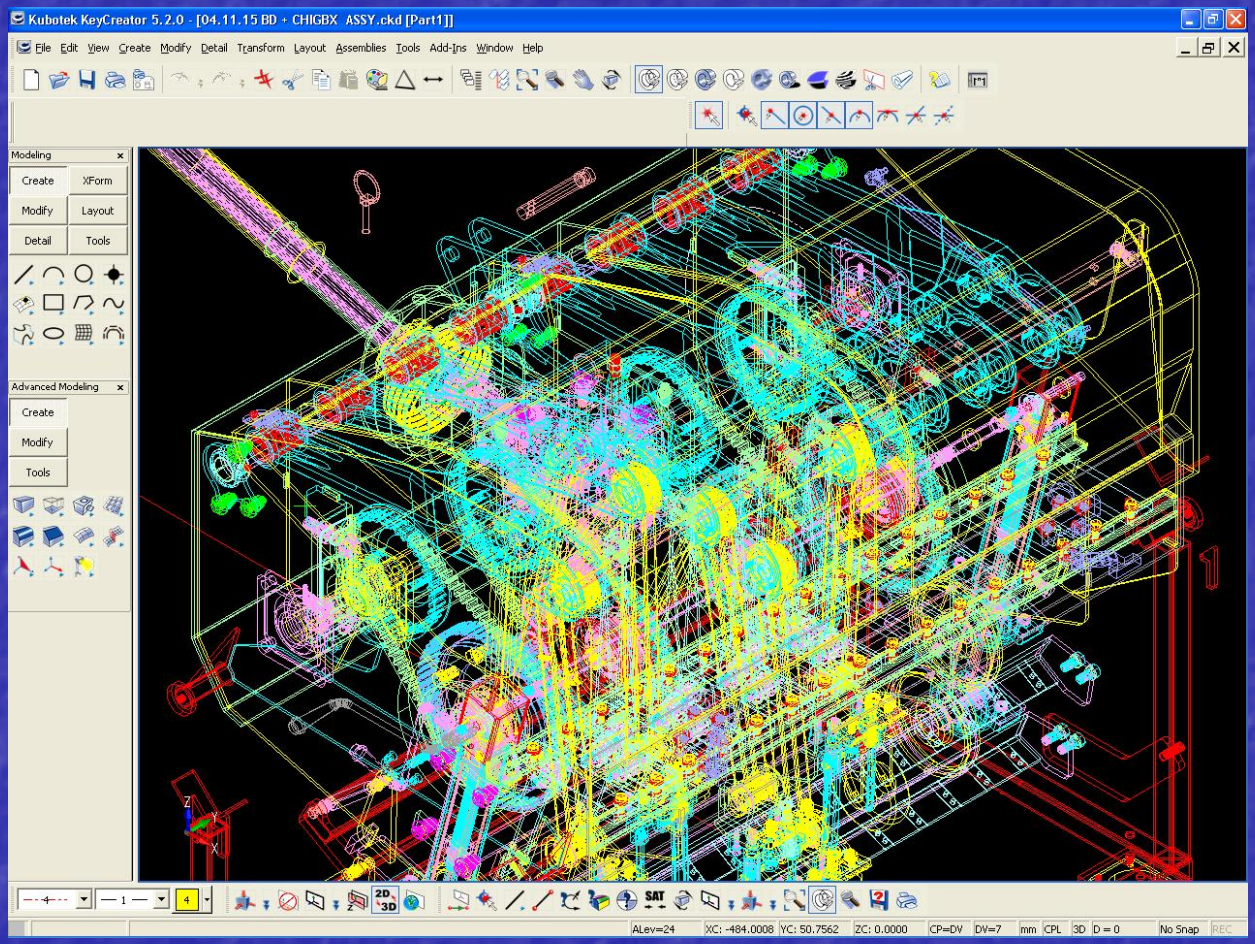

OK, now how do we sort out this mess in Solid Edge?

Work in Progress – something old, something new …

- Many parts were redesigned or simply re-modelled ‘from scratch’ in Solid Edge to ensure that accurate, robust models were used in the various sub-assemblies. Simply importing 3D geometry is often more trouble than it is worth …

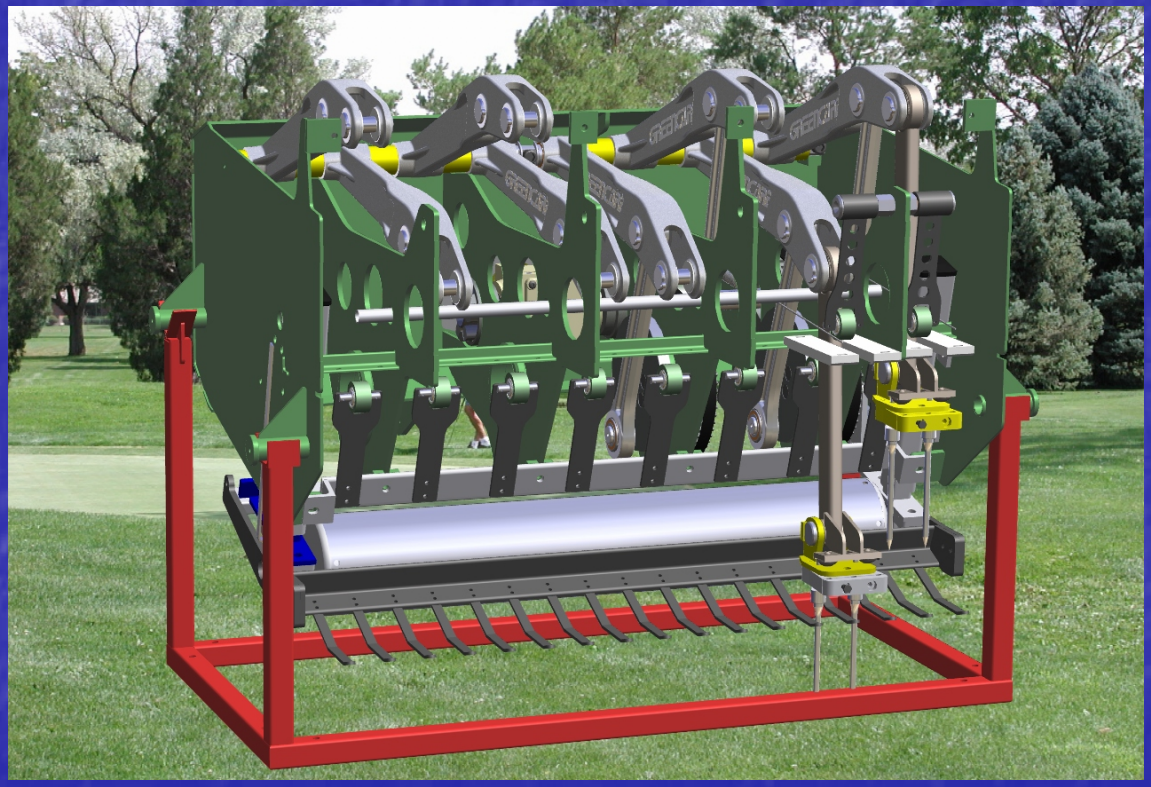

How to make sure it works?

There are LOTS of critical clearances (both for running AND assembly) which need to be established and maintained here. Servicing accessibility is also an issue ...

Many of you with grey hair will remember making cardboard cut-outs pivoting on thumb-tacks to check clearances on lever systems, actuators, linkages etc - or to create a sweep-envelope manually ...

'**Cardboard Aided Design**' as we called it!

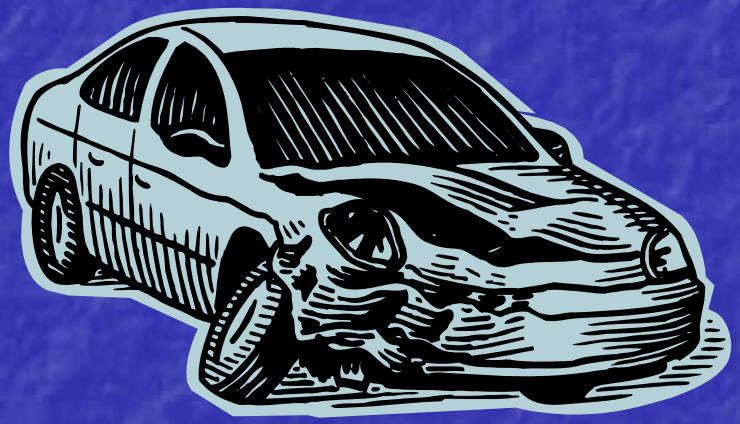

Surely 3D CAD should have much more powerful tools for checking clashes, interferences and other “crunches” BEFORE the ugly noises begin - but where the heck are they??

Dynamic Clipping

Move Part

Sensors

Check Interference

Simply Motion

- This session will reveal where some of the really useful tools for this purpose are cunningly concealed in Solid Edge!

Assy Cutaway Views

Colours & textures

Breakout/Section Views

Families of Parts

Alternate Assemblies

Adjustable Assemblies

and more ...

Common Misconceptions about (Y)our New Design.

- Purchased Part Dimensions are exactly as printed in the catalogue/catalog.
- The Pattern Maker doesn't smoke (*anything!*).
- All tolerances stack up in your favour/favor.
- You remembered to change BOTH the crank throw AND the housing diameter …
- Holes never wear to become slots.
- Bearings last forever.
- All plate is perfectly flat, and of unvarying thickness
- The press-shop will use exactly the tools you requested
- Flame-cut shapes are accurate to 0.025mm / 0.001" or better.

To do our job properly, we need to allow for some worst case scenarios which may not always be obvious during modelling of our designs.

These are (typically):

- Tolerances of form & dimension – eg twist & bow in long parts, irregularities/shrinkage in castings, batch variations in production.
- Parts located at extremes of adjustment (bolts DON'T stay perfectly centred/centered) in clearance holes as AXIAL ALIGN suggests!!!
- Expansion and contraction which reduce/increase clearances, even with changes in ambient temperature.
- Statutory minimum clearances which may be required between parts for safety reasons etc. (eg to avoid pinch-points or for access)
- Parts may need to be assembled into 'difficult' spaces, requiring both hand **and** tool access to secure.

To do our job properly ...

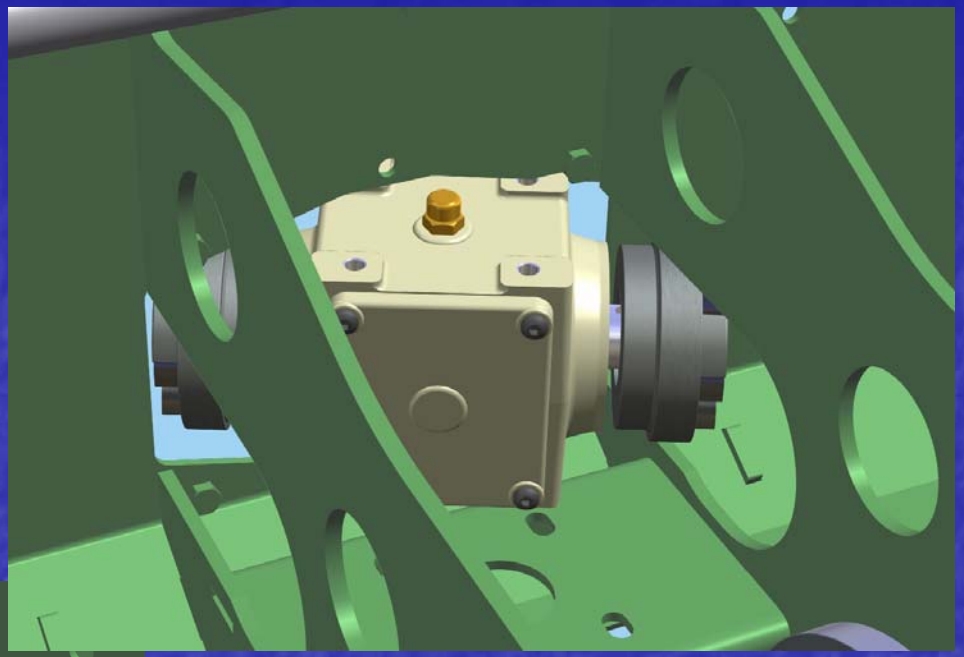

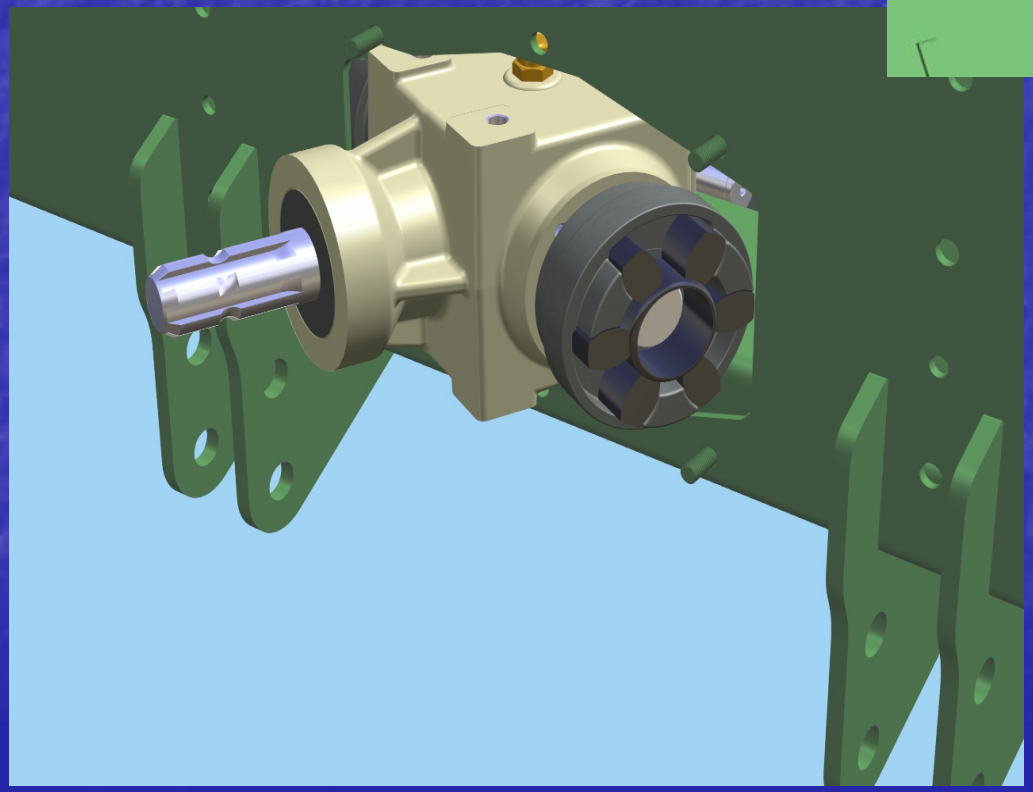

... we need to use appropriate tools to ensure form, fit & function.

eg: The new arrangement for this gearbox requires that it be fitted through the smallest possible aperture with the coupling-halves already in place. What shape is the optimal cutout?

What’s in the box?

Let’s examine the various environments in Solid Edge to see what tools are available to check that our assembly will go together without involving large angle-grinders, cutting torches or lawyers!

- Part Environment
- Assembly Environment
- Draft Environment
- Other

What tools are at our disposal in Solid Edge to ensure a satisfactory outcome?

1. Part Mode

- Use of Families of Parts to emulate critical tolerance conditions (worst case for manufacturing tolerances, wear etc). Create adjustable references in slots.
- Create offset surface envelopes to represent clearance / keep-out zones. These can be displayed in Assy or Draft.
- Build keep-out zones (as solids) in a Master Template which also contains critical location datums & references.

2. Assembly Mode

- Simply Motion allows animation based on assembly rules but is NOT contact based (i.e. Shafts stay centred/centered in bushings regardless of clearances).
- Multi Position Assemblies allow visual checking of assemblies at known critical configurations
- Move Part offers collision detection and contact based motion by dragging parts. (Has some drawbacks eg: colliding faces not highlighted and VERY slow to update for complex components such as castings)
- Sectioning tools (Dynamic Clipping and Assembly Cut-away Views) are invaluable for inspecting clearances
- Colour (color) and Texture assist greatly in different-iating components and in focusing on materials issues.

Colours & textures don’t just make the picture prettier…

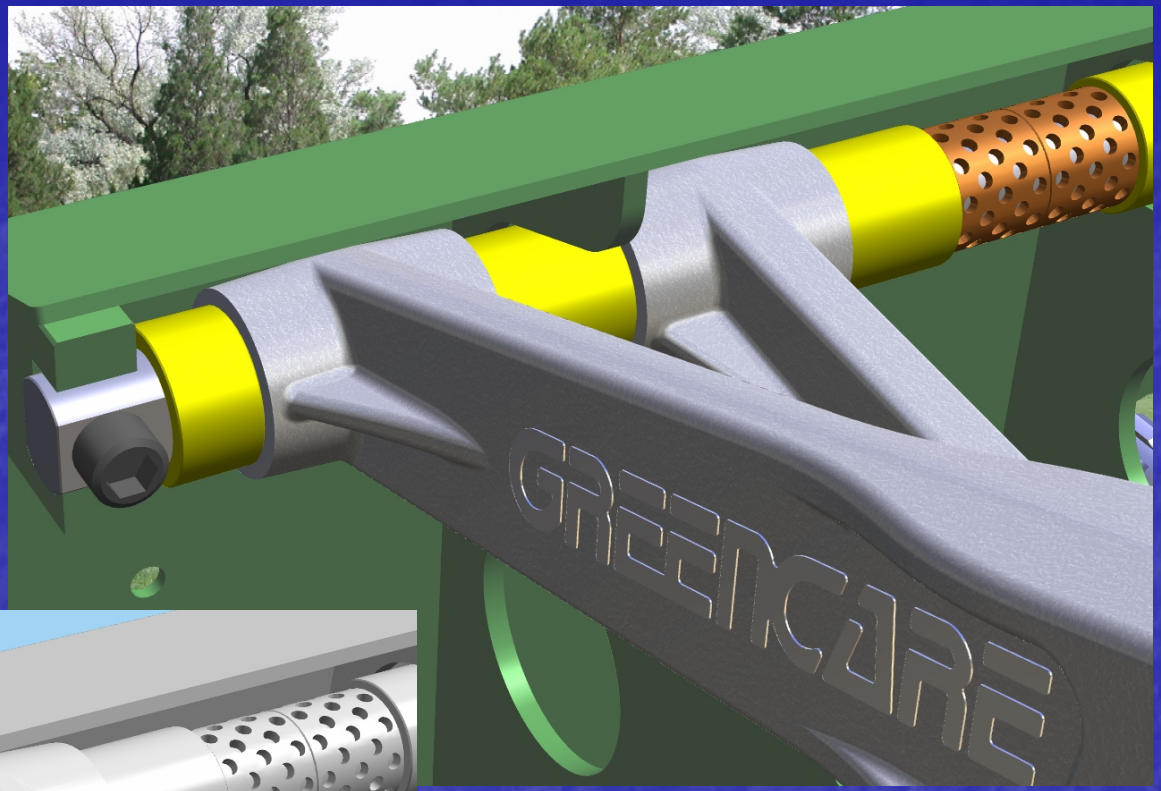

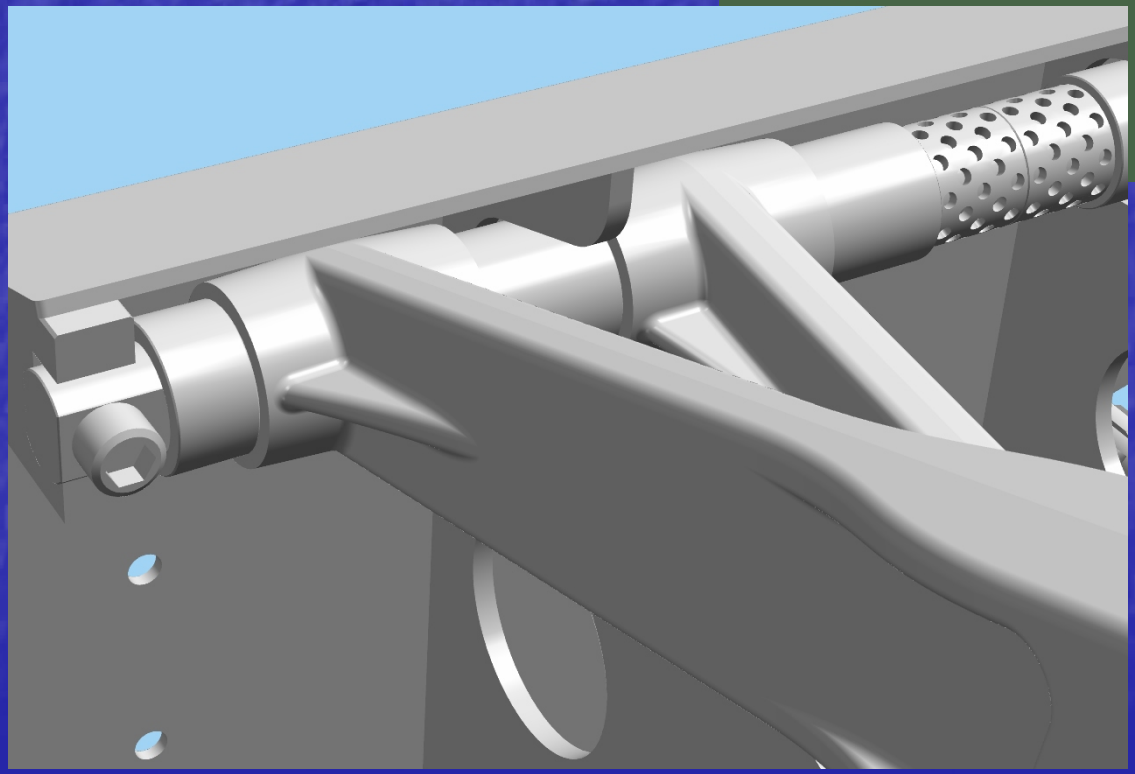

… they assist in recognition and help keep material compatibility etc. in mind.

Hey, shouldn’t that Capscrew be stainless steel???

Gets rave reviews from our Customers, too!

Assembly Mode continued

- Sensors – these allow distance based dynamic observations of the assembly as well as other quantitative analysis.
- Adjustable Assemblies allow ‘real world’ assembly sequences to be used – but BEWARE their effect on Patterned parts AND in the Exploded Assembly env’t!
- Carefully placed Layout Sketches can be used to advantage for measuring clearances etc. BUT require Included edges.
- Alternate Assemblies allow the placement of MMC/LMC-state components in turn to test their effect.

3. Draft Mode

- Simple and complex Section cuts, Breakout Section Views, ‘paper thin’ sections and Detail views are all invaluable tools in the Draft env’t for checking clearances etc. We often create a Draft file JUST for inspecting the top-level Assembly, switching to the Draft window & refreshing sections etc. as the Assembly is updated.

- Interfering parts show interfering hatching!

- Assembly Cutaway Views are frequently overlooked in Draft, but are a lifesaver for checking inside concealed regions of the Assembly whilst only cutting selected components.

- - and more!

Don’t trust your eye … or luck!

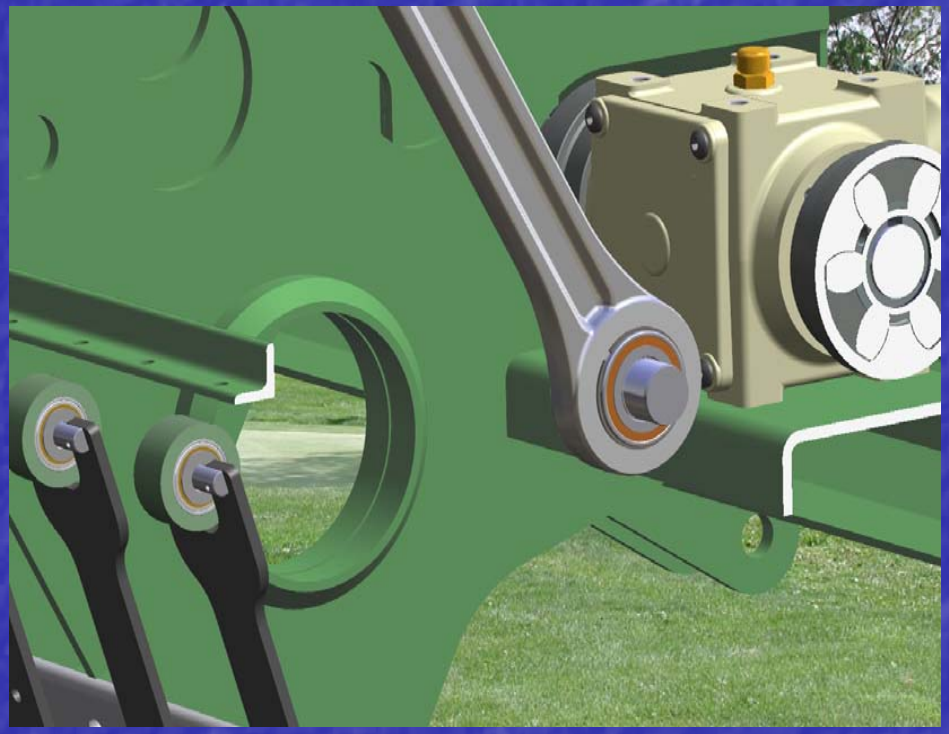

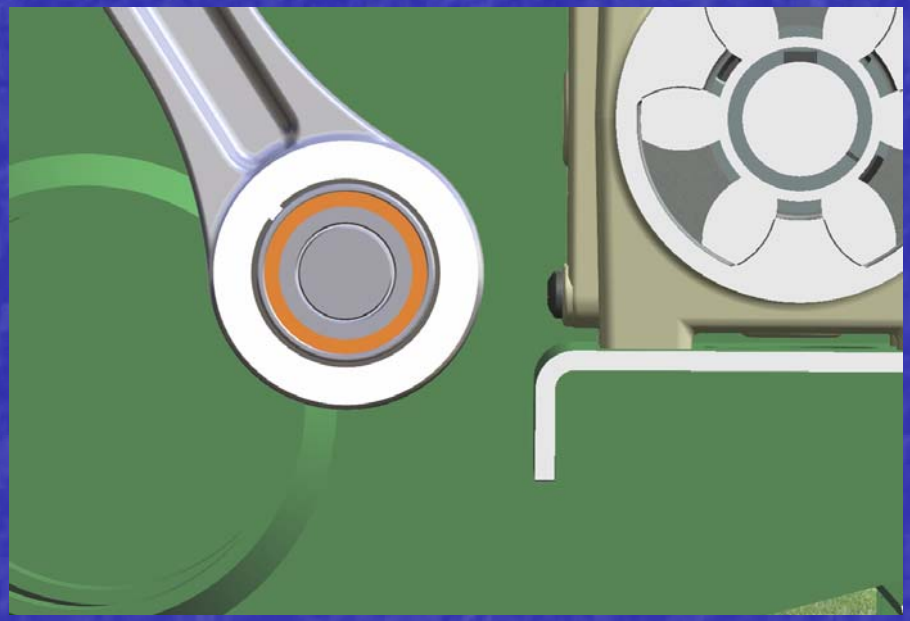

… Now use Move Part in conjunc-tion with Sensors to check critical clearances

Dynamic Clipping is a great tool for inspecting congested or concealed regions in your Assembly …

Here’s one we prepared earlier!

Let’s cross live to the MASCO kitchen to see how to prevent this recipe from turning into a turkey ;-)

Hey, if it doesn’t work we could maybe use it as a combination tenderiser / rotisserie ...

Solid Edge v18 ‘Live’ Session

- Sensors – Minimum Distance
- Move Part with Collision Detection and Physical Motion
- Inspect / Check Interference
- (time permitting) Simply Motion – ‘Find Interferences’

Masco Design Services Pty Ltd

Sydney, Australia

(+61 2) 9589 1144 rick@mascodesign.com.au