Solid Edge and Zero D

Judd Mulkerin & Rick Loring

LMGi

Judd@TLMGi.com

Rick@TLMGi.com

888-421-7305

Premium Partners:

Introduction

Judd Mulkerin, LMGi

Judd has over thirty years of manufacturing experience and has been a Solid Edge user and consultant since its release. Judd has a unique ability in combining broad market insight with his knowledge of engineering automation.

LMGi offers informed and reliable client support.

Introduction

Class files are available at our website:

www.TLMGi.com/PLM_World_06

Overview

- **Our objective for this session is to expose you to:**

- Using Solid Edge Assembly Sketch for Component Layout
- Associative modeling through Inter-Part Linking
- Virtual Component Structure editor.

Why Model in the Assembly?

The benefit gained from modeling within the assembly.

- Existing parts can constantly be referenced to assure proper fit and alignment to the new part being modeled.
- Assembly structure can be determined and tweaked in the conceptual stages of of design via the Virtual Component Structure Editor.

Review of Modeling Methods

Bottom Up Modeling

(does not involve modeling in the assembly)

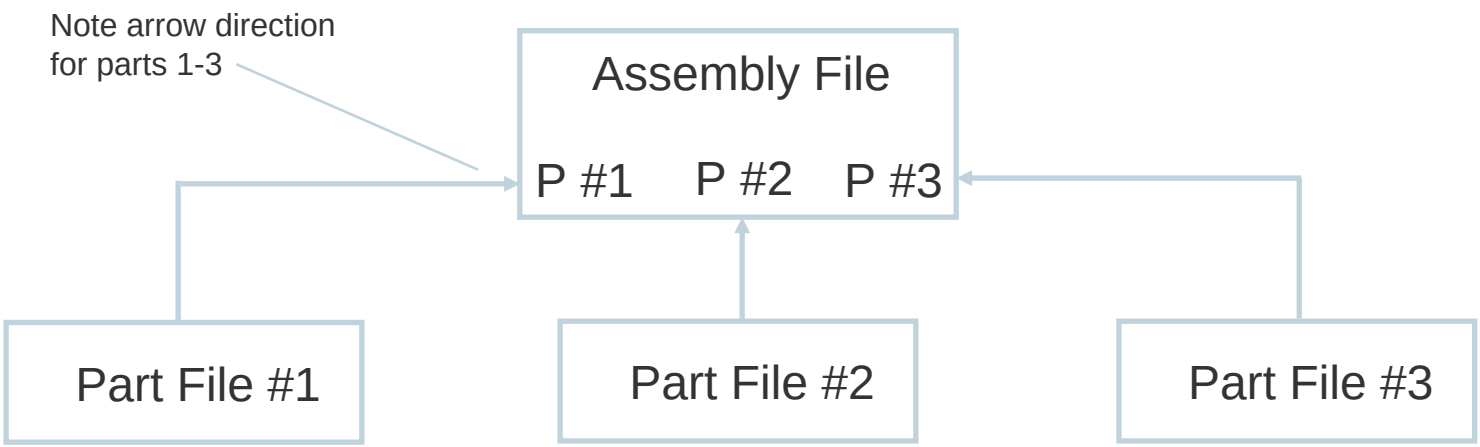

1. Each part modeled independent of the other
2. Once completed each part is placed in an assembly file
3. Mating relationships between all parts

Review of Modeling Methods

Top Down Modeling

Designing in the assembly

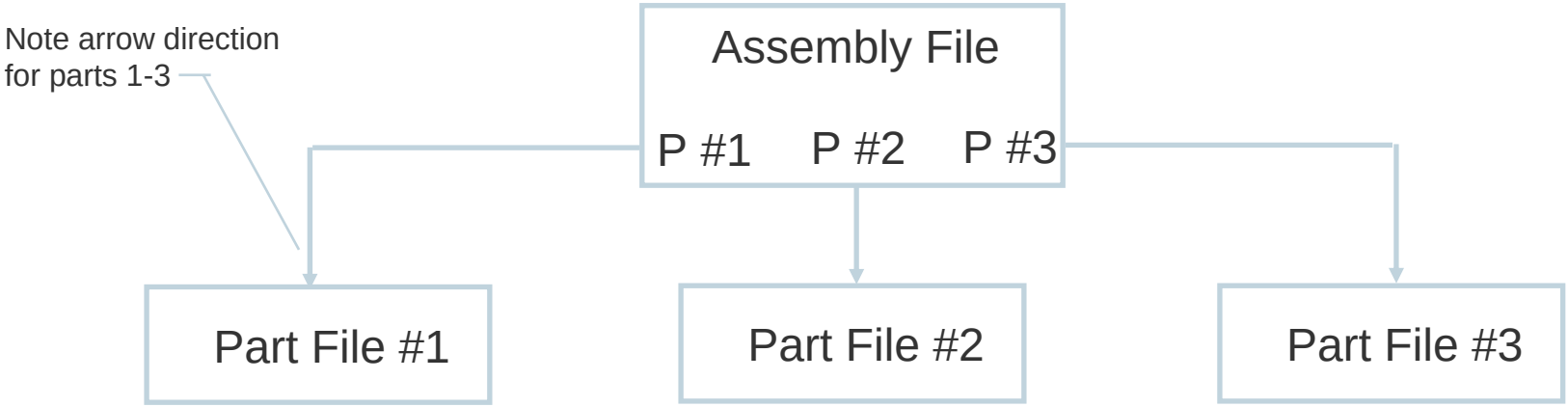

1. Each part modeled in context of the assembly (together)
2. Appropriate assembly relationships applied between all parts

Note: Each part occupies its own file space (.par or .psm file)

Review of Modeling Methods

Bottom Up / Top Down Modeling (combined)

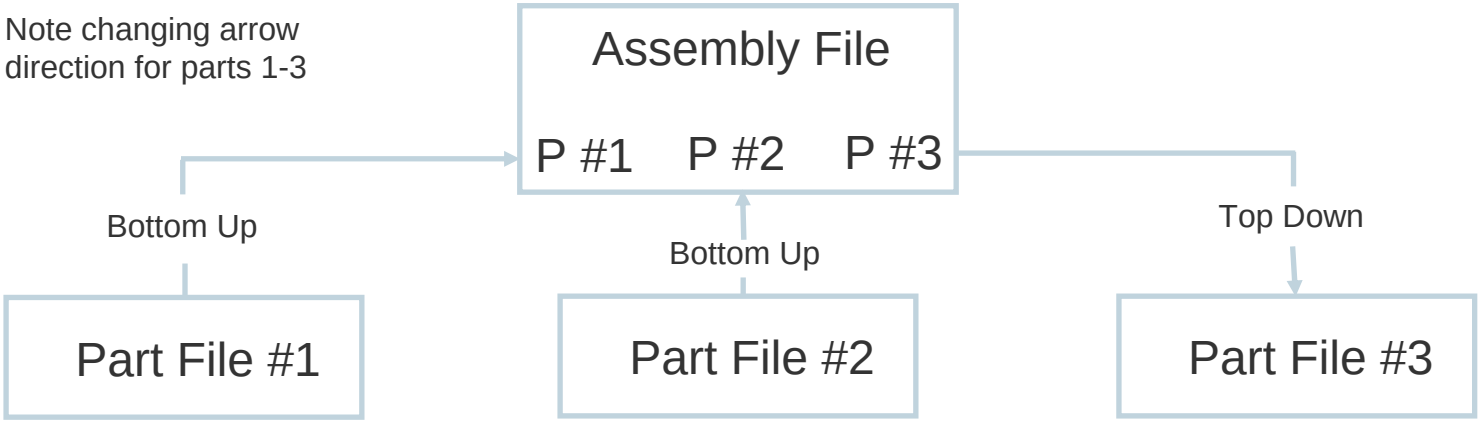

1. Open assembly file
2. Place existing parts into assembly any time during design process using bottom up method
3. Model new parts using top down method
4. Apply assembly relationships between all parts

Remember…each part occupies its own file space (.par & .psm file)

Top-Down Modeling

- Involves modeling parts within the assembly
- Method referred to as ‘Create In-Place’ in Solid Edge

- Virtual Components can structure assemblies in the conceptual stage using sketches.

- Can direct Solid Edge to maintain *Inter-Part Linking between parts, or <u>not</u> to maintain Inter-Part Linking between parts

*<u>Inter-Part Linking</u> - to maintain associative links between parts so that when the parent part is modified the child parts modify accordingly.

Create In-Place

- Must be in Assembly environment
- Create In-Place button located on Parts Library tab of EdgeBar

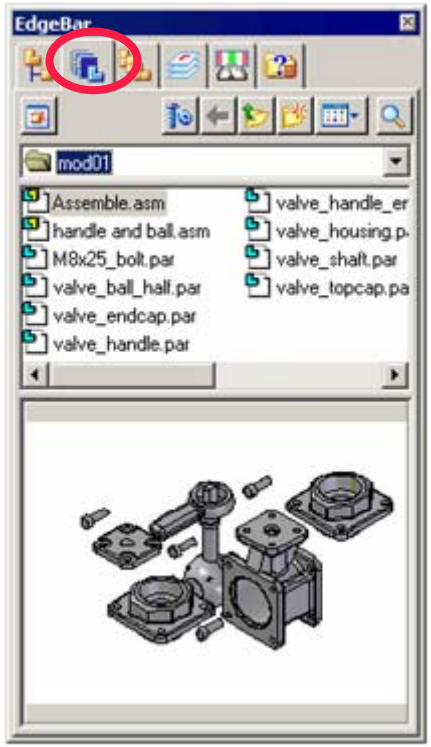

Create In-Place

Clicking Create In-Place button displays the Create In-Place dialog box

The following input is required:

For selecting a template for the new part file (.par or .psm)

Type in new file name

Select directory for new file to reside

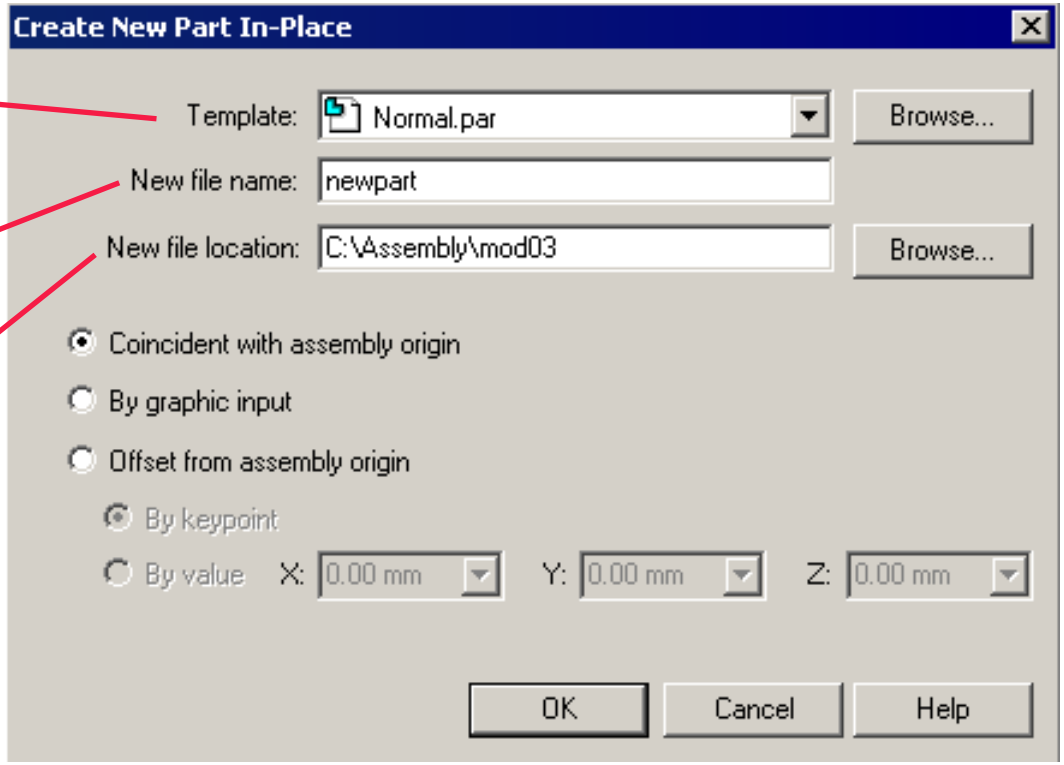

Create In-Place

Input required (continued)

Places new part at center of assembly file

Positions new part from face or edge of existing part

New part position is offset from the assembly file origin…
<u>By keypoint</u> - use keypoint from an existing part
<u>By value</u> - position by typing in values in the X,Y,Z

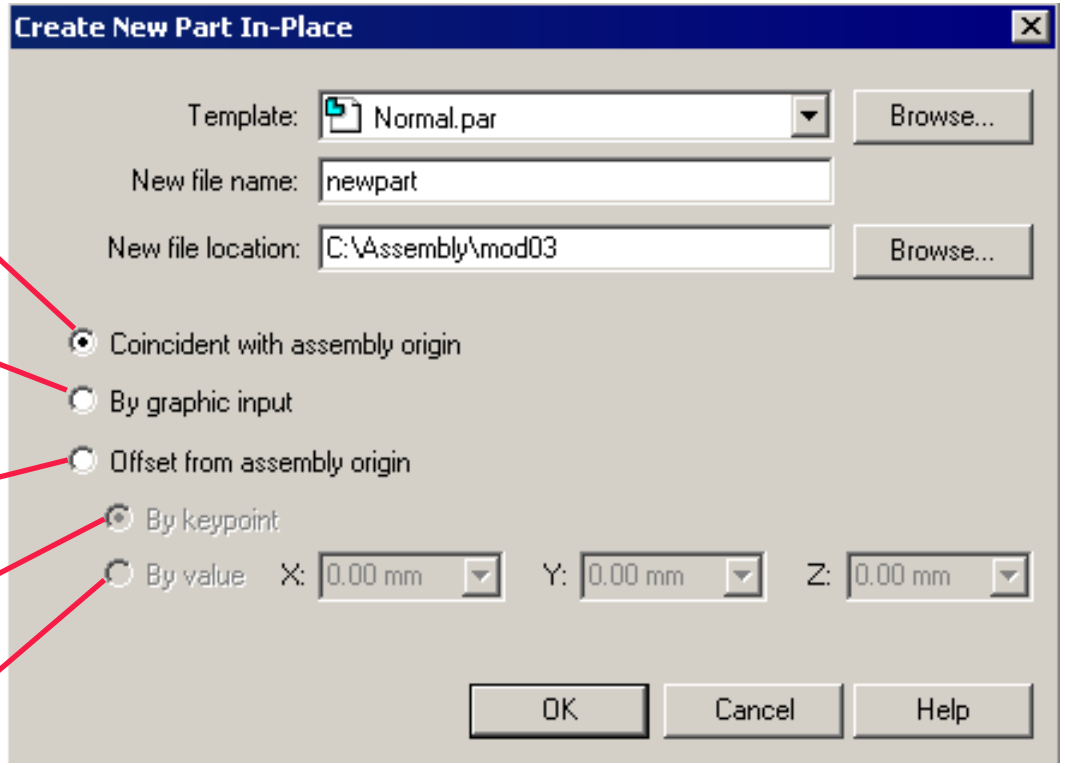

Inter-Part Associativity

- Establishes associative linking between mating parts
- Must use create In-Place method of new part construction
- Must explicitly indicate to Solid Edge that inter-part relationships are desired by accessing desired options on the Inter-Part dialog box

Inter-Part Linking

To access, select Inter-Part tab on Tools → Options menu

Copy geometry (i.e.; surfaces) from parent part to drive new part

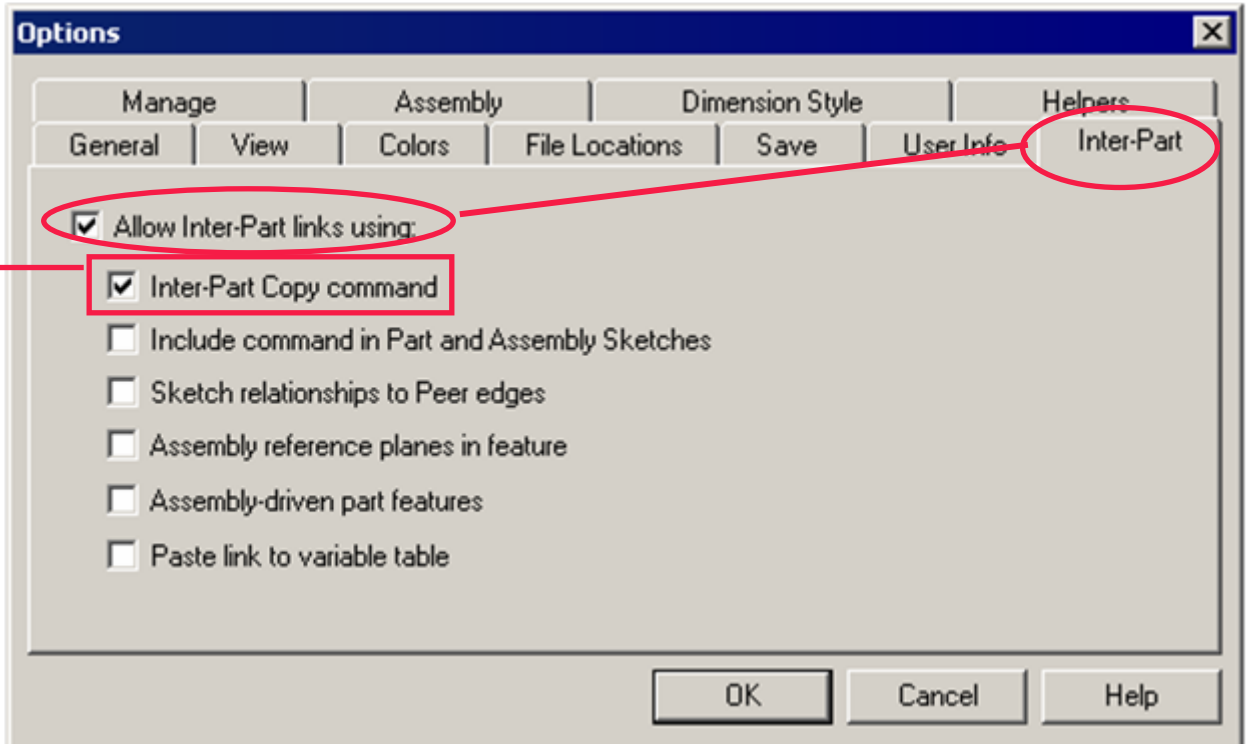

Inter-Part Linking

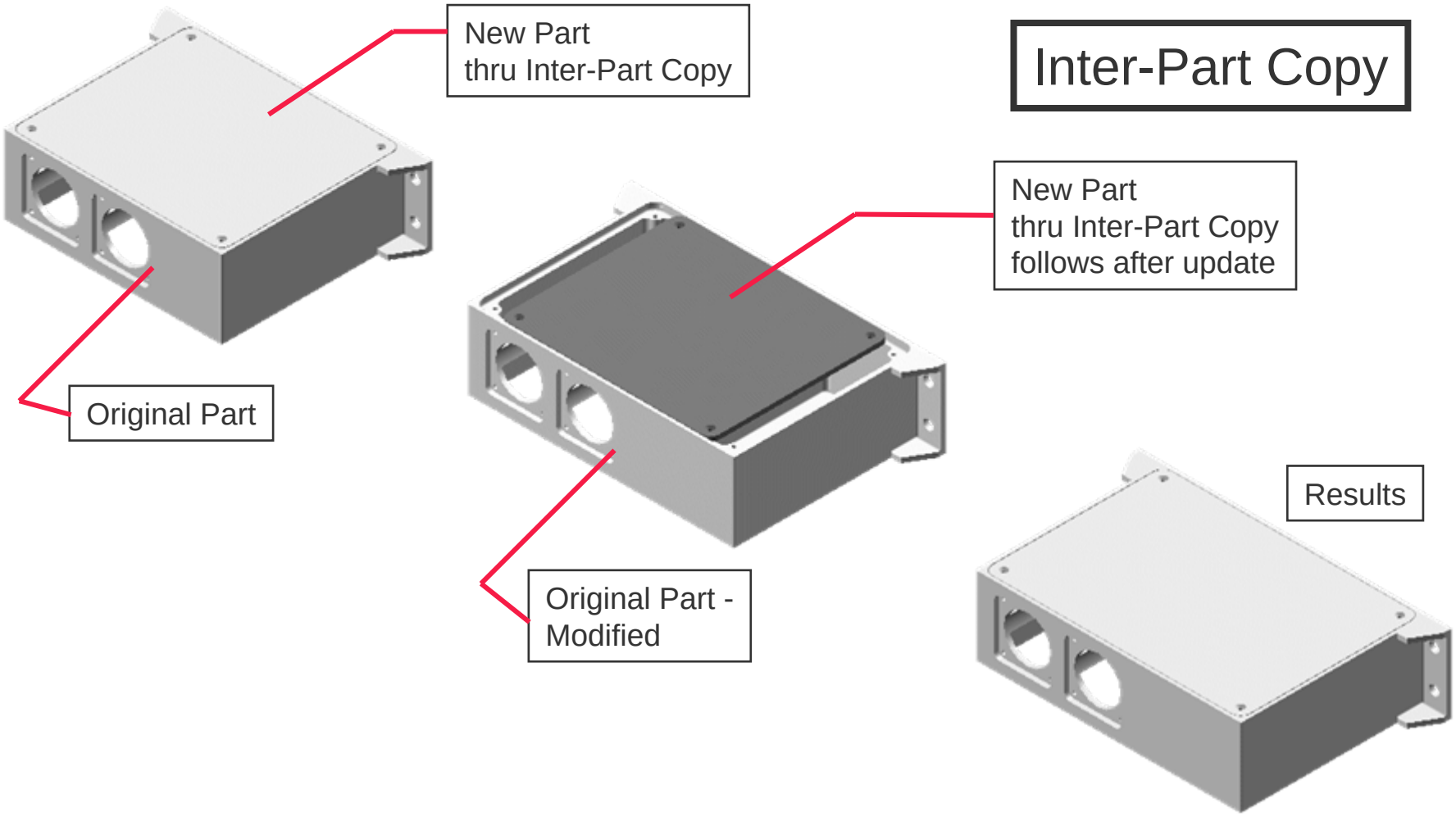

How is this done? See next slide...

Inter-Part Linking

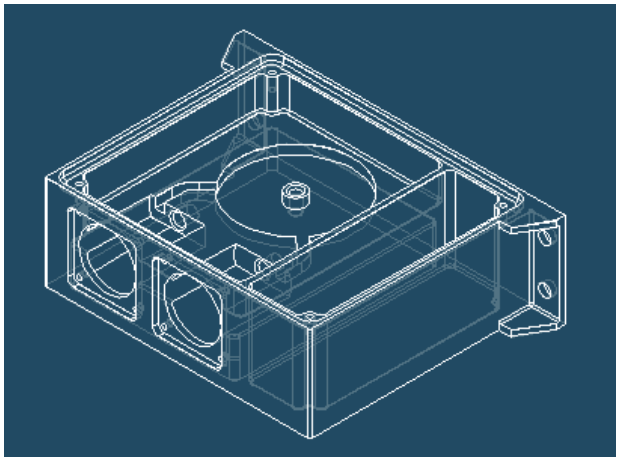

Original Part in assembly - needs cover

1. Select this option

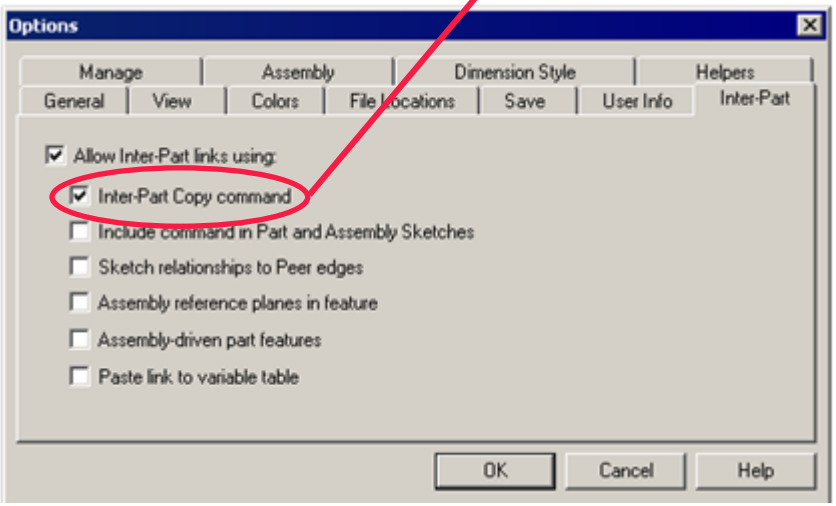

Inter-Part Copy

2. Use Create In-Place to setup new part
3. Once in part environment select Inter-Part Copy…select desired faces

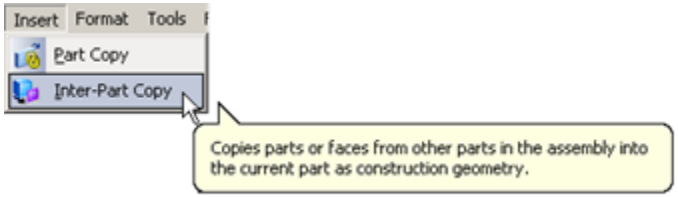

Select faces

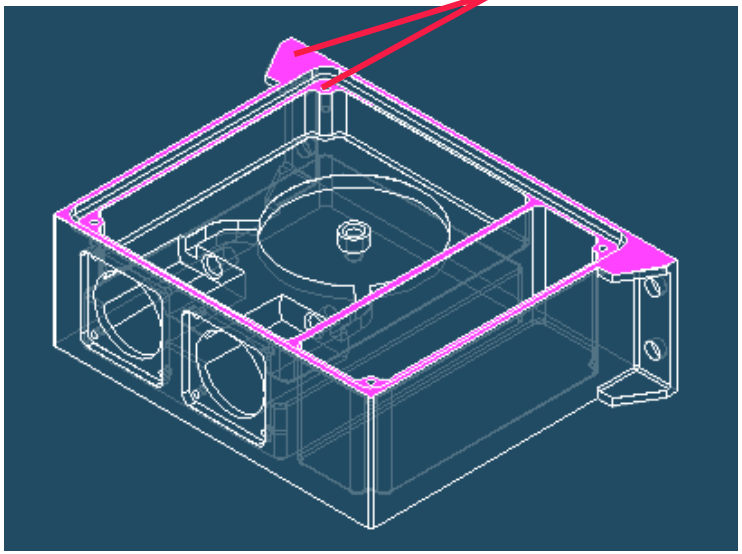

Inter-Part Linking

These faces are used to derive the associative design parameters that will drive the new part

The copied faces are used to…

- draw the profile
- control extents for thickness
- hole location

The faces are driven by the original part in which they were copied.

If the original part changes the copied faces update driving the changes to the new part.

Inter-Part Copy

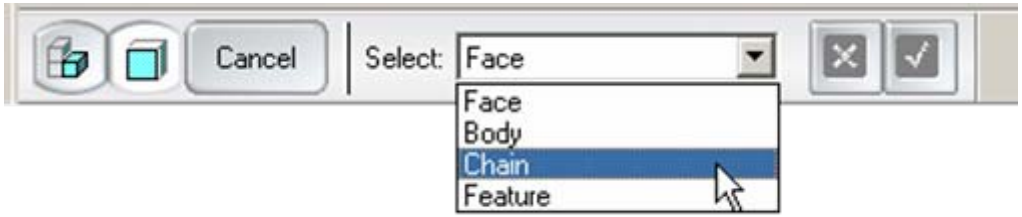

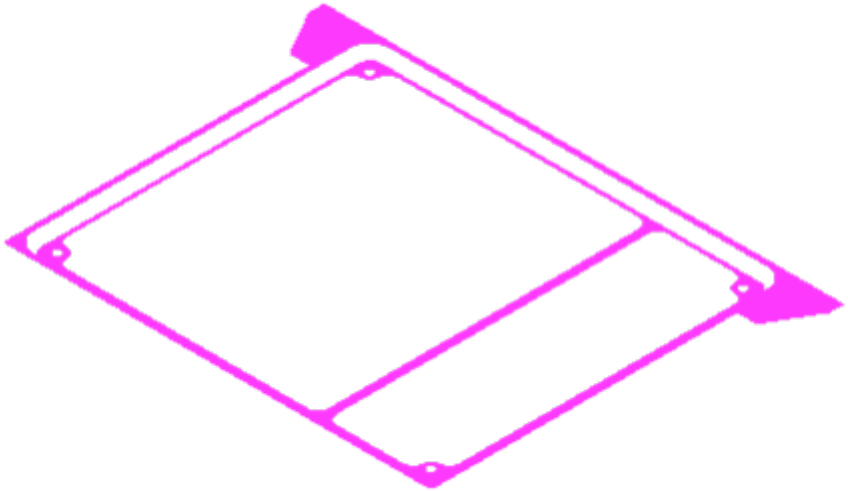

Inter-Part Linking

Inter-Part Copy

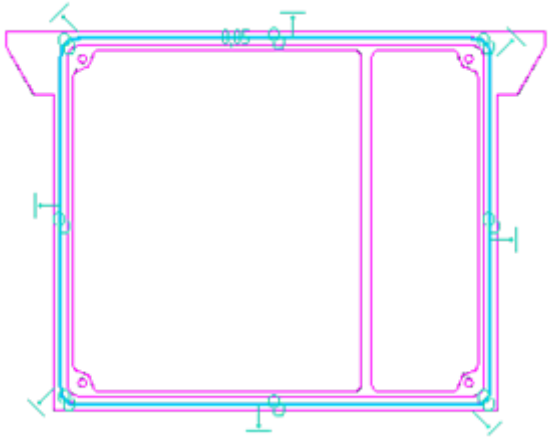

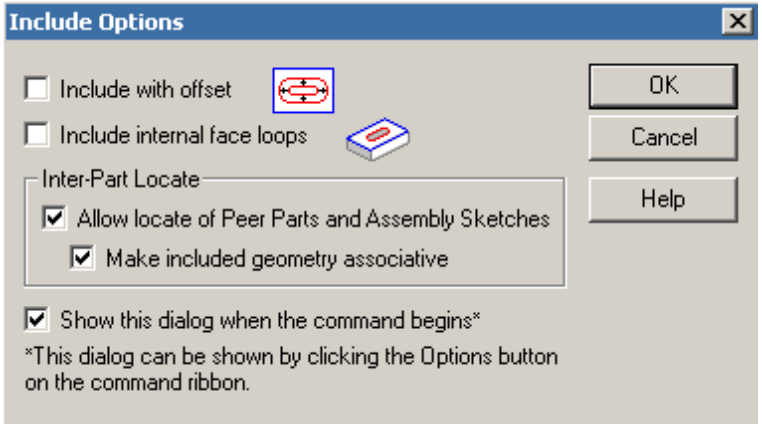

Tip…the key to Inter-Part Copy is knowing what geometry to copy.

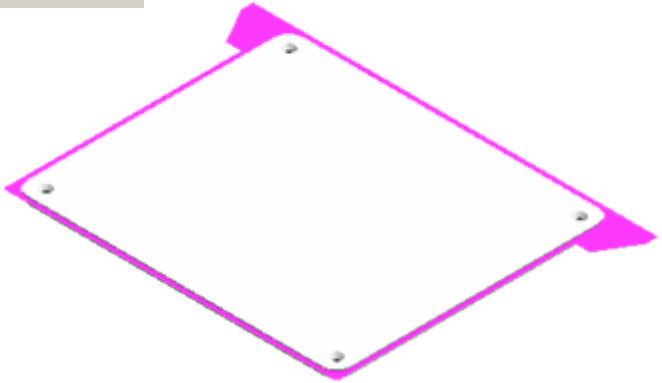

Protrusion and Hole features made the new cover part.

Inter-Part Linking

To access, select Inter-Part tab on Tools → Options menu

Copy assembly sketch geometry into a part file, if assembly sketch changes so does part(s)

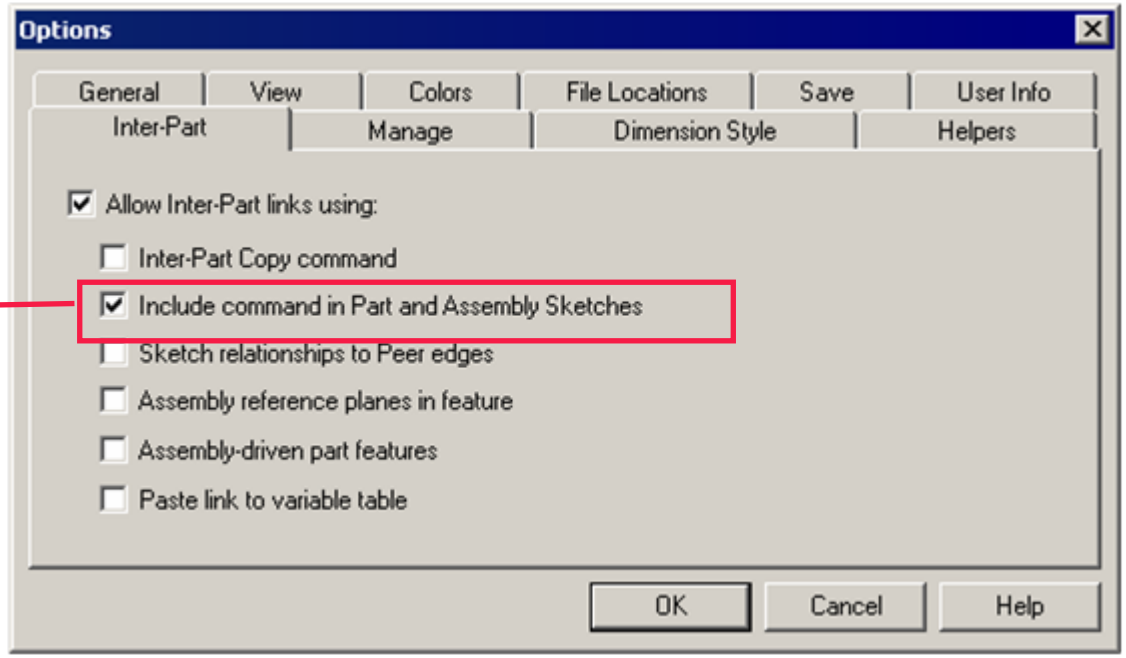

Inter-Part Linking

Include from Assembly Sketches

Note how parts show as associatively linked to part files

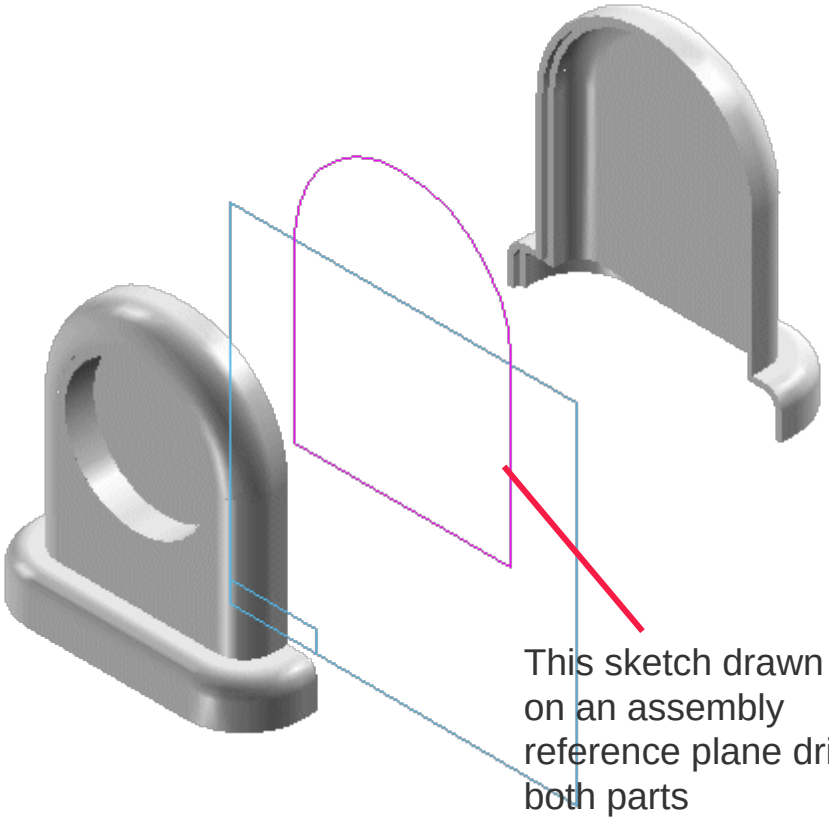

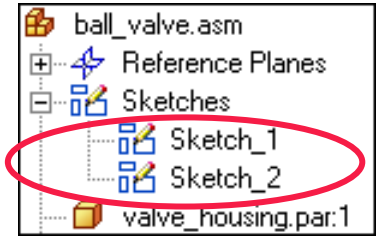

Assembly

Inter-Part Linking

Include from Assembly Sketches

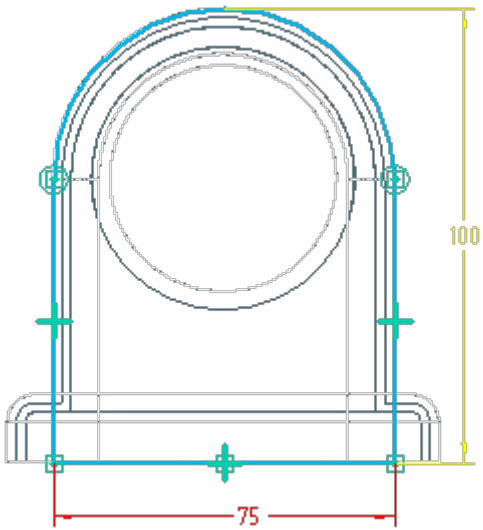

Before sketch modification

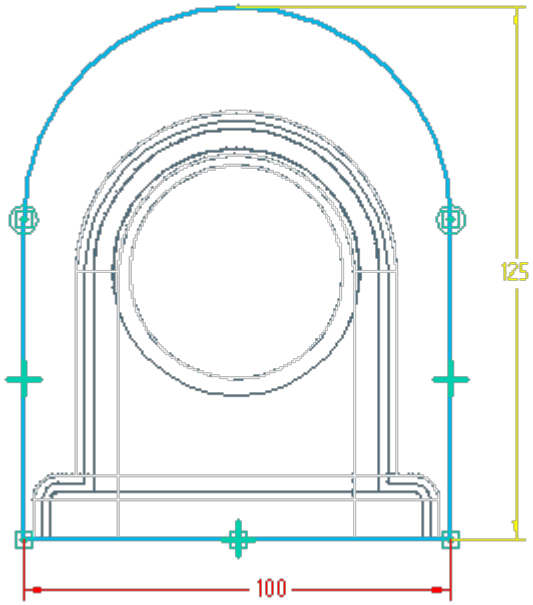

After sketch modification

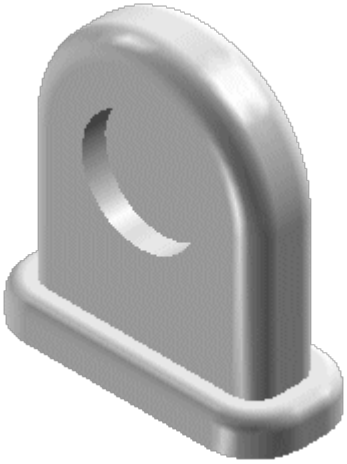

Inter-Part Linking

Inter-Part tab on Tools → Options menu (continued)

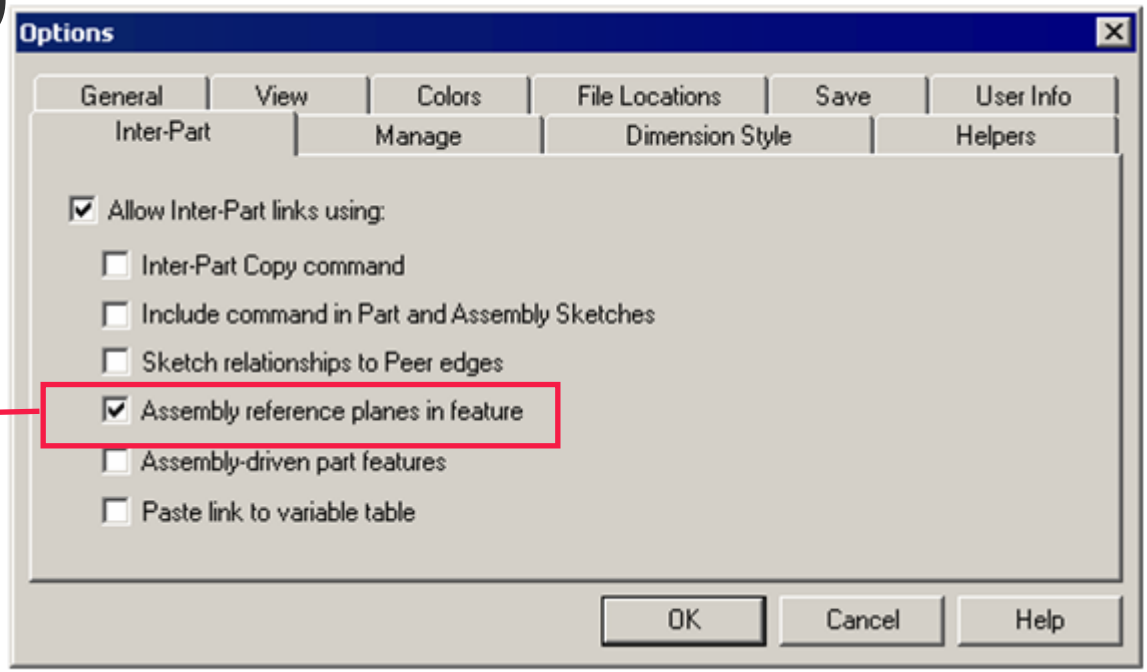

Allows you to use an assembly reference plane when constructing a new feature.

Inter-Part Linking

Assembly Reference Planes in Feature

- Permits use of an assembly reference plane to create a feature in a part file
- Display of assembly reference plane(s) must be turned on
- To select assembly reference plane in a part file you <u>must use SHIFT select</u> (hold shift key down to make reference plane selection).
- Can be used for features including extents

Inter-Part Linking

Inter-Part tab on Tools → Options menu (continued)

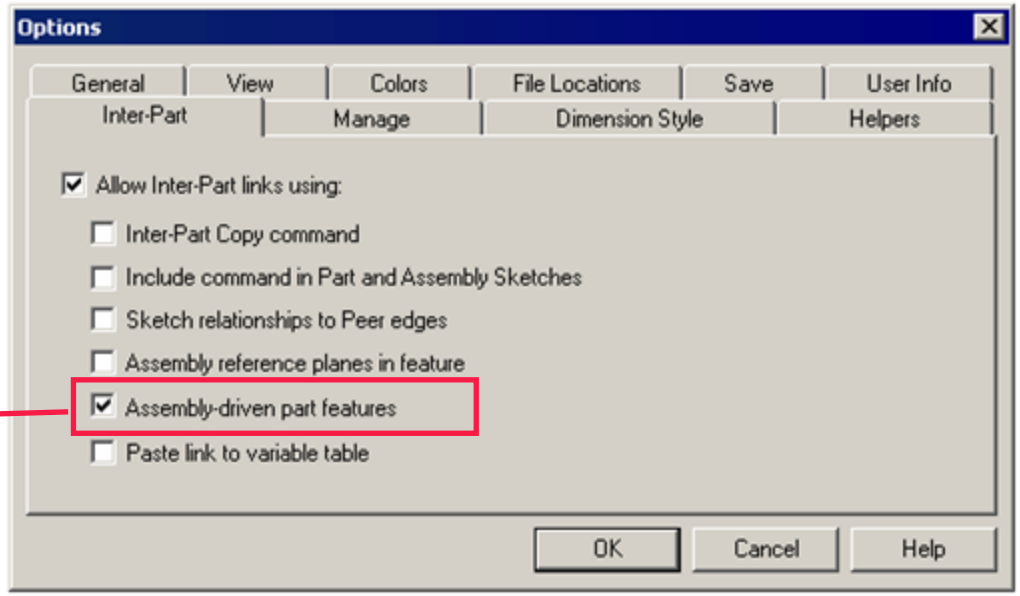

Adds an associative cutout to multiple parts in an assembly

Assembly Driven Features

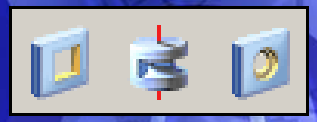

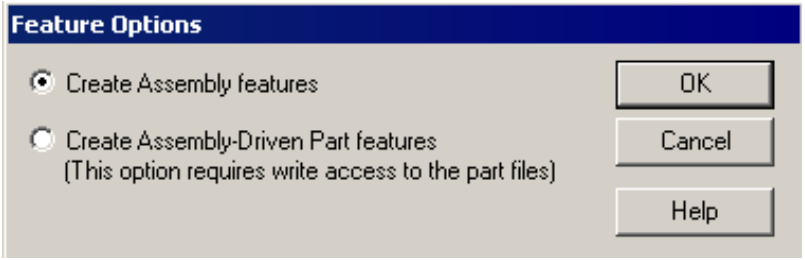

- Hole, Cutout, Revolved Cu
- Features can reside in the assembly only (parts unaffected) or be linked to the part.

Parts selected for cutouts

Sketch on an assembly Reference plane

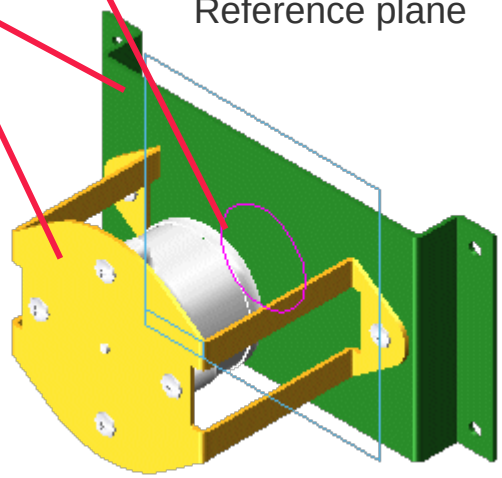

Assembly

Resulting Cutouts

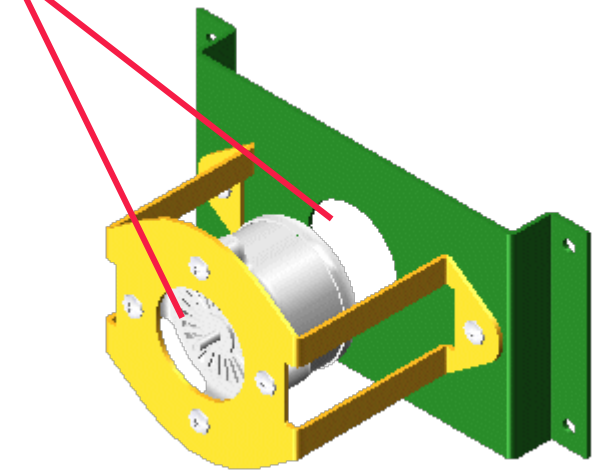

Inter-Part Linking

Inter-Part tab on Tools → Options menu (continued)

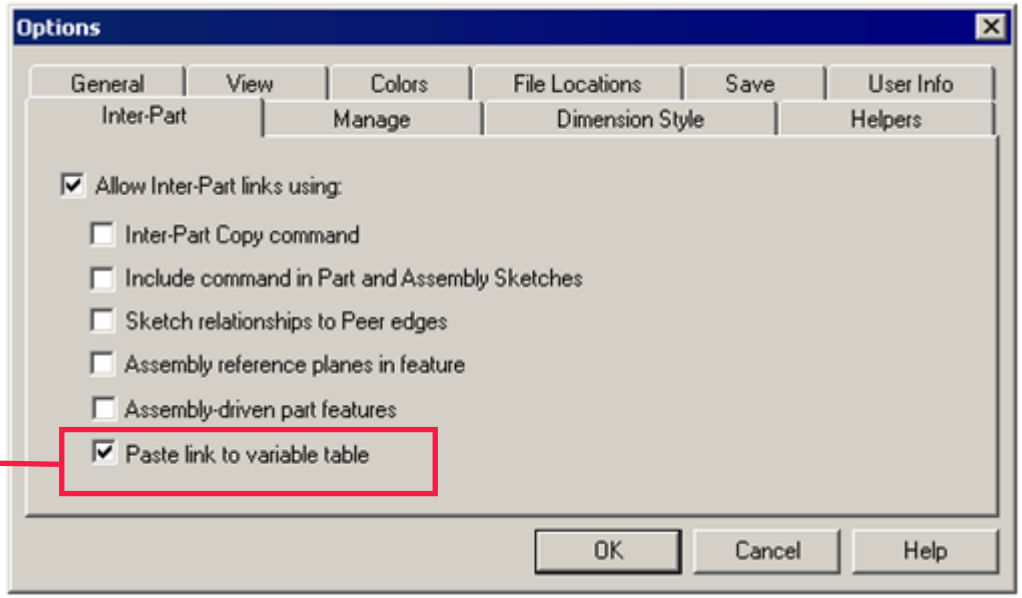

Paste assembly variable into the Variable Table of other parts or assemblies

Inter-Part Linking

Paste Link to Variable Table

Permits pasting a variable created in the assembly variable table to corresponding part variables

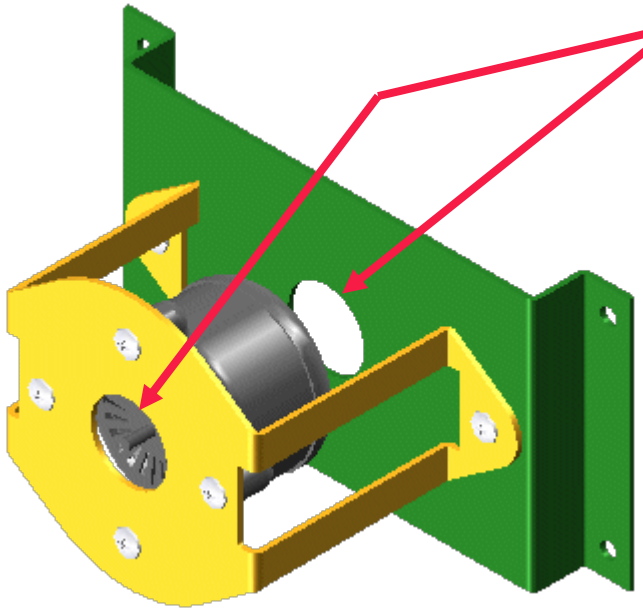

MultiPartCut.asm:Variable Table

distance

Type	Name	Value	Formula
Var	V336	0.00 mm	
Var	V375	0.00 mm	
Var	V439	0.00 mm	
Var	V456	0.00 mm	
Var	V497	0.00 mm	
Var	Shaft_Hole	30.00 mm	

This assembly variable drives the holes in the two parts

Inter-Part Linking

Paste Link to Variable Table

Create the assembly variable (example: Shaft_Hole)
Copy the variable by right clicking for short cut menu

Paste Link the variable to the appropriate part(s) file by right clicking for short cut menu

Note…the Paste Link to Variable Table option must be selected on the Inter-Part Linking tab of the Tools>Options dialog box

To see part changes in the assembly click the 'Update All Links button...

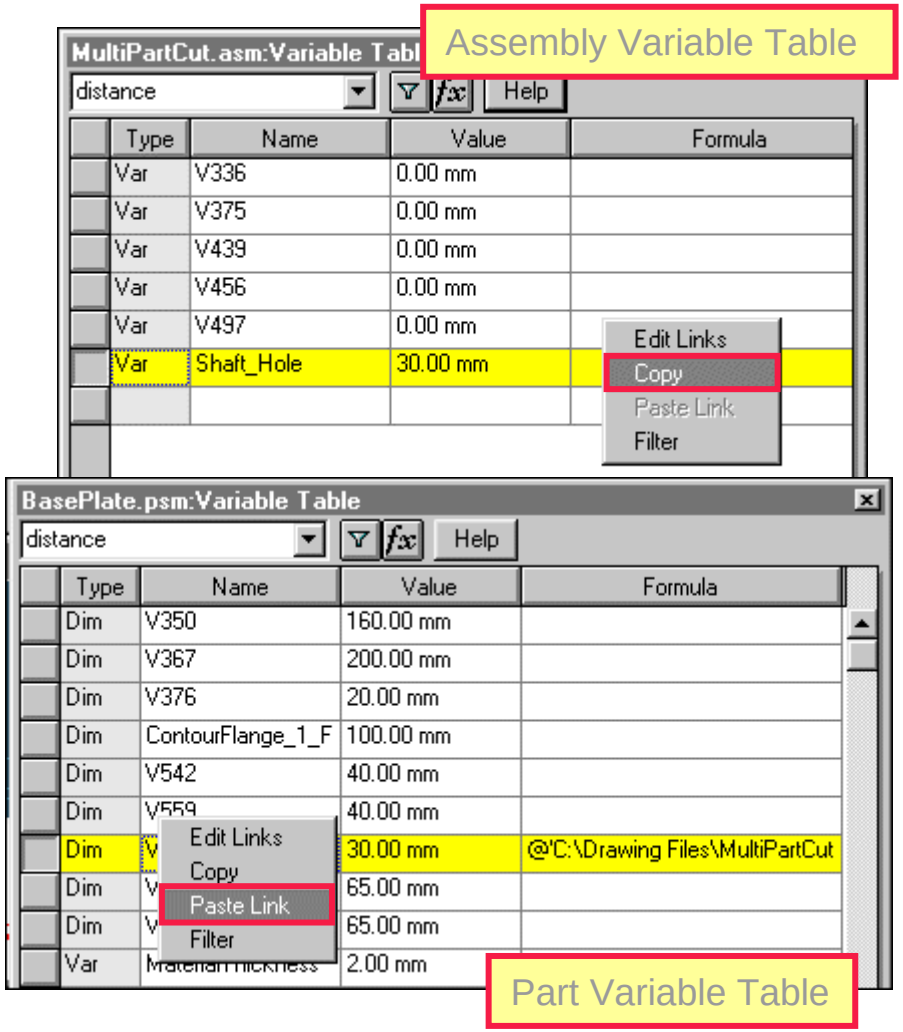

Inter-Part Manager

Inter-Part Manager is a dialog interface that permits display and management of inter-part relationships in an assembly

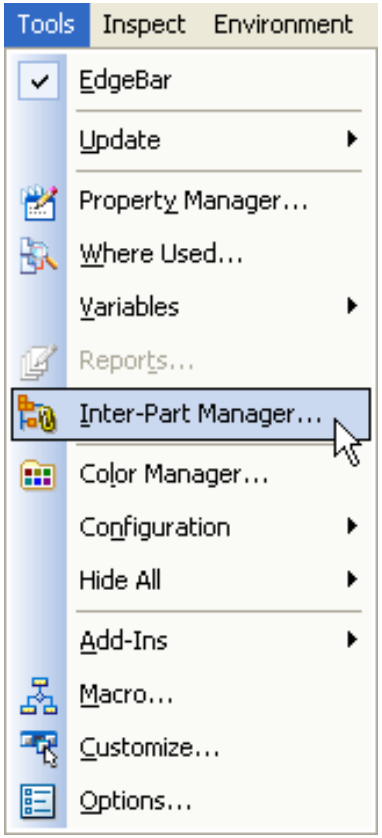

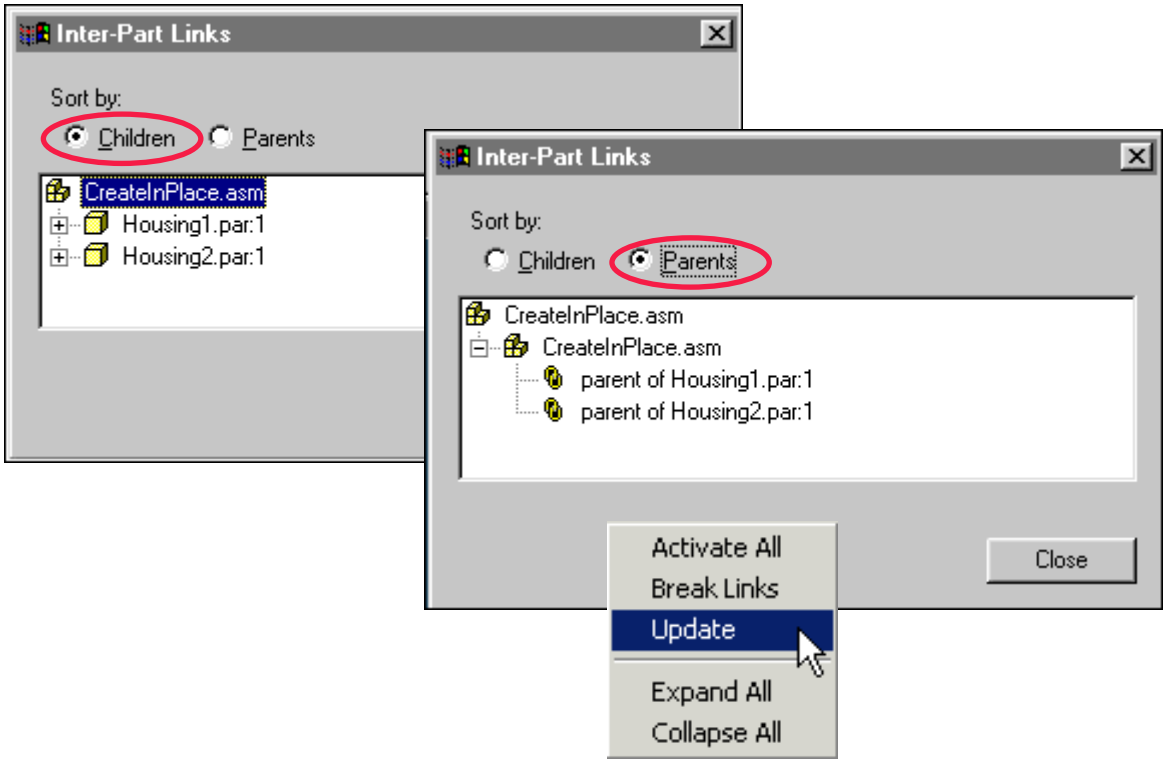

Inter-Part Manager

Symbols used to indicate status of links

Legend	
	Part
	Assembly
	Inter-part copy
	Variable
	Reference plane
	Sketch or Profile
	Link is intact
	Link status cannot be determined because parent is inactive
	Parent is not found
	Link to parent is broken

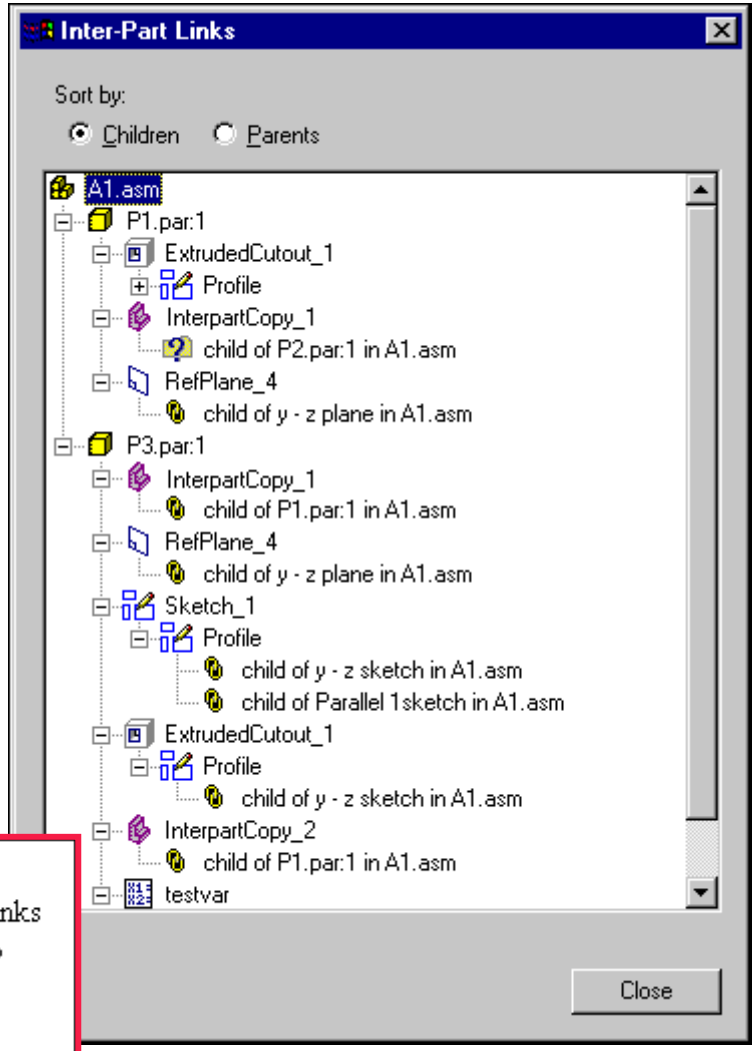

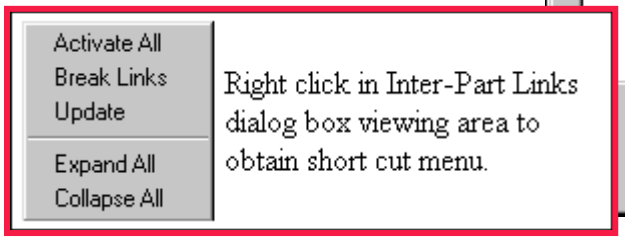

Right click in Inter-Part Links dialog box viewing area to obtain short cut menu.

Virtual Component Structure Editor

- **An Assembly Structure can be derived while the assembly is in the conceptual stage.**
- **Geometry in sketches can be assigned to future part files and the sketches will migrate to the part file when the virtual assembly is published.**

Virtual Component Structure Editor

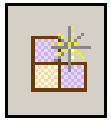

- **Virtual Component Editor defines future assembly structure.**
- **Place holders for Part, Sheet Metal and subassemblies can be placed.**
- **Existing parts and subassemblies can be added to the structure.**

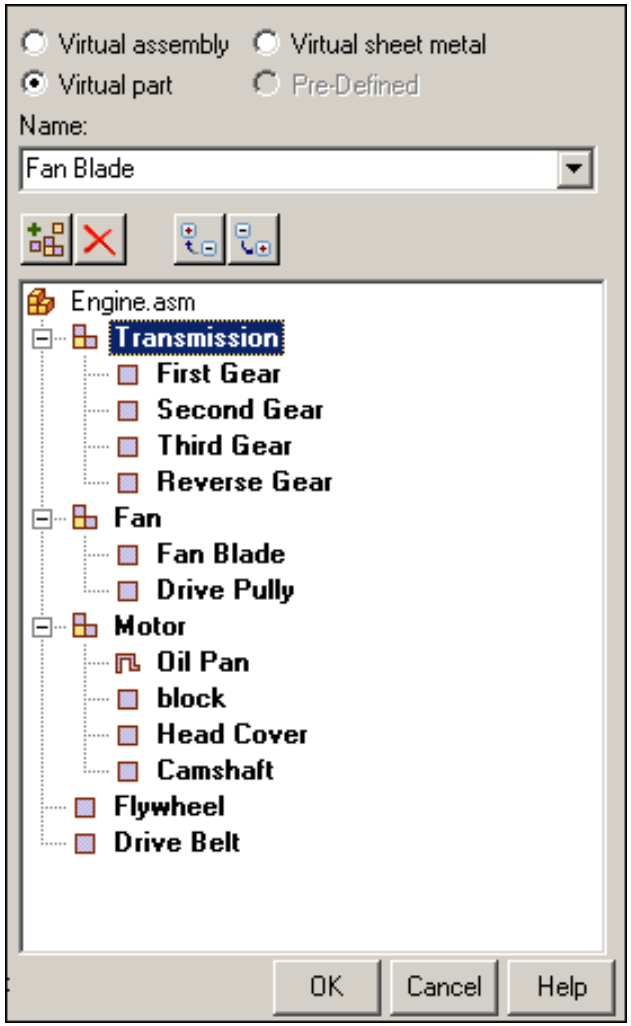

Virtual Component Structure Editor

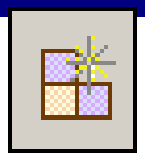

- **After clicking OK, Virtual Component structure is placed in Assembly PathFinder**

- **Virtual Components can now be associated with Sketch Geometry**

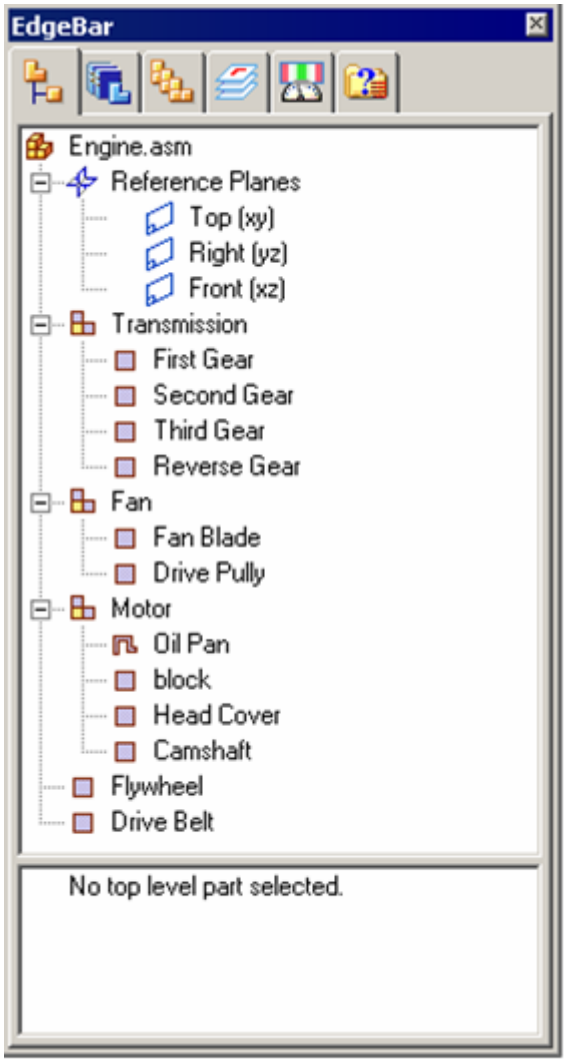

Virtual Component Structure Editor

- **Sketch MUST be open in "Edit Profile" to associate sketch geometry to virtual components.**

- **In PathFinder, right-click on the part and then click Edit Definition**

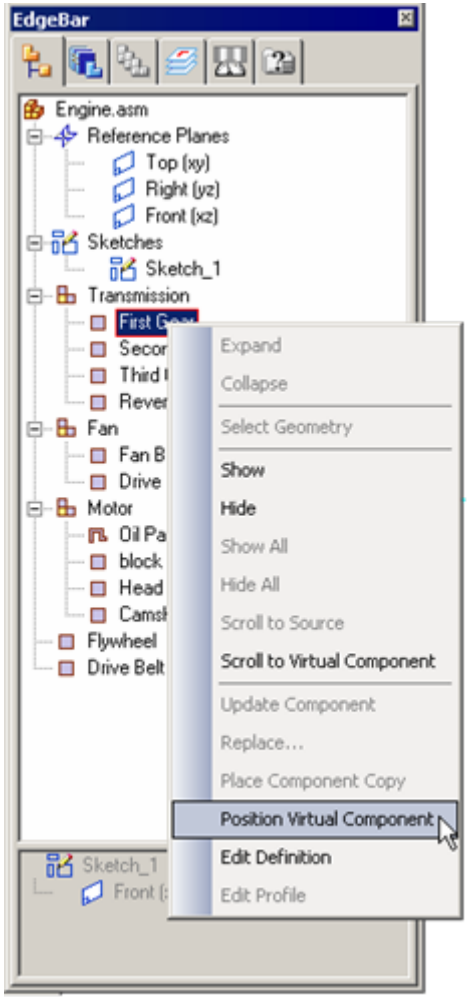

Virtual Component Structure Editor

- **First, geometry associated with Virtual part is defined.**
- **Next, the origin is defined.**
- **Click Finish. Do not Exit "Edit Profile" if you want to associate additional geometry to another virtual component.**

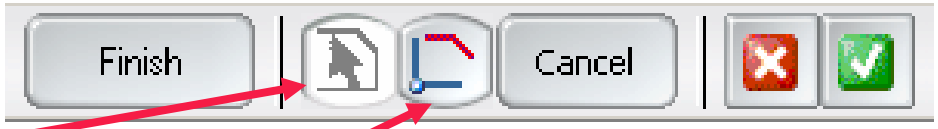

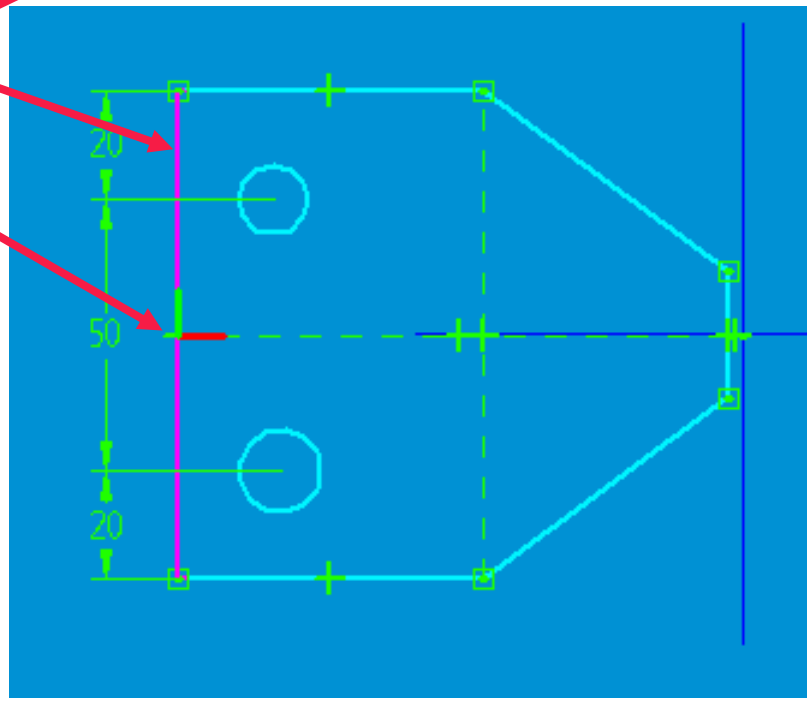

Component Sketches

- **A Component Sketch is used to position existing parts in a virtual sketch.**

- **Component Sketches are created within the part or assembly that you are trying to place in the virtual component structure.**

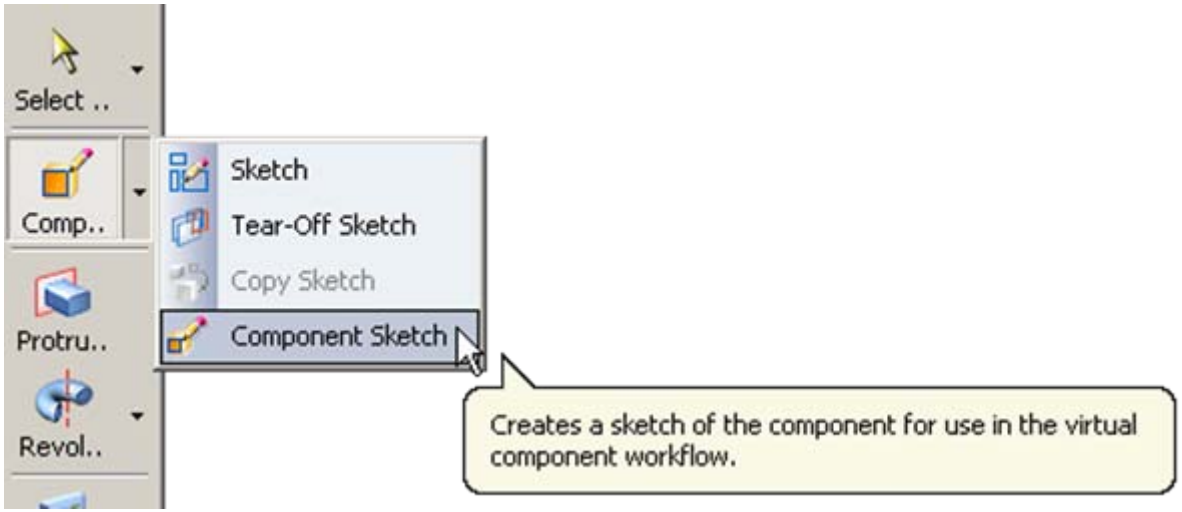

Component Sketches

- **Use the Component Image command to add 2D graphics to the sketch. This geometry is just a picture and keypoints are NOT locatable.**

- **Use the Include command to add Precise geometry to the sketch for accurate placement as a virtual component.**

- **Next Slide shows workflow.**

Component Image

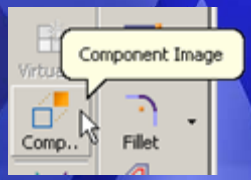

- **Accept the geometry, footprint added to Component Sketch.**

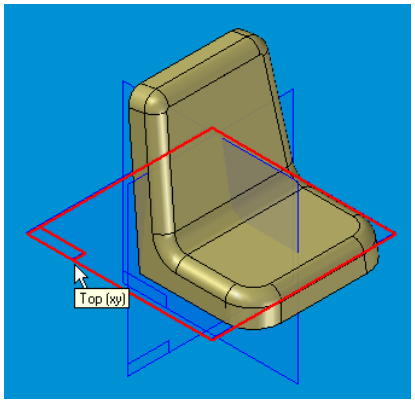

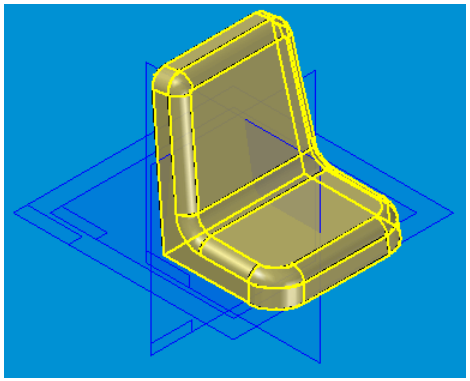

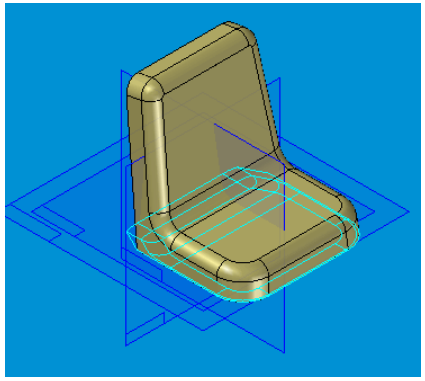

- **Include geometry needed to precisely locate component.**

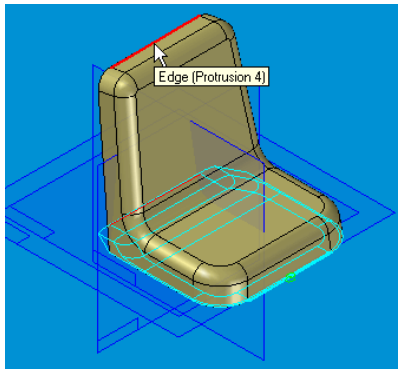

Existing Parts in Virtual Assemblies.

- **Drag the part into the virtual structure editor or browse for it.**
- **Right-click to Position Virtual Component.**
- **If the part has a component sketch, select the corresponding plane to place.**
- **Position Part on Sketch.**

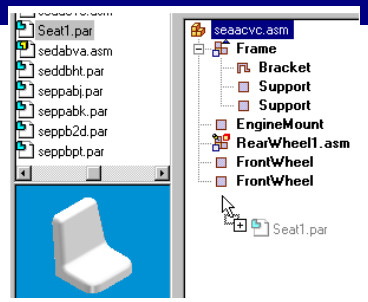

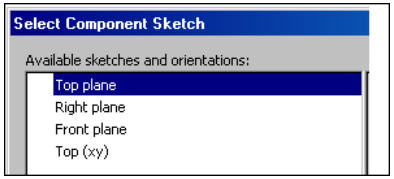

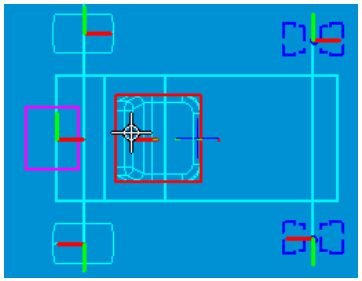

Virtual Component Structure Editor

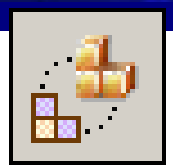

- **Publish Virtual Components creates the parts and assemblies defined by the Virtual Component Structure Editor, and populates each part with sketch geometry as previously defined.**
- **Part destinations and templates can be specified.**
- **Once published, Parts can be in place activated to model in the context of the assembly with a top down approach.**

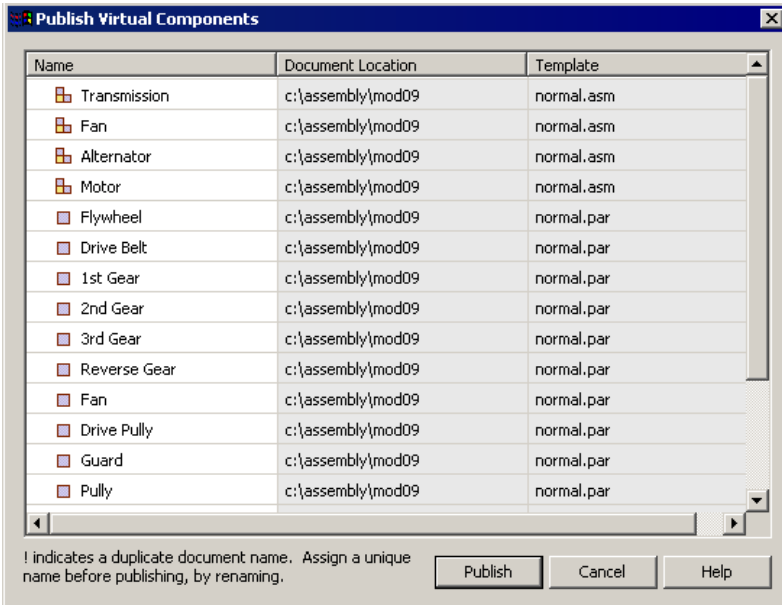

Review

- What is the difference between Top Down and Bottom Up modeling of an Assembly?
- Where is the Create-in-Place icon located?
- Can you use an assembly layout sketch with Interpart copy?
- Explain the steps of using a multi-part cutout and give a situation where it is useful.
- Give a reason why you would want to paste-link to a variable table using Interpart copy.
- What happens to sketch geometry associated with virtual components when you click the publish command?

Summary

- **When a new part must be modeled and is part of an assembly, model the part in the context of the assembly environment: Use the Create In-Place method**

- **To maintain associative relationships between parts within the assembly use Inter-Part Linking you must indicate this thru: Tools → Options → Inter-Part**

- **Use Inter-Part Manager to view and manage inter-part relationships within the assembly**

- **Virtual Components allow assemblies to be conceptualized and tweaked prior to publishing, using sketch geometry.**

Activities

- **Virtual Component Editor**