Femap Overview

Alastair Robertson

UGS

al.robertson@ugs.com

(714) 952-5506

Premium Partners:

Why Use Simulation Tools?

- Early evaluation of designs
- Failure analysis
- Reduce costly prototypes and physical testing
- Perform trade-off studies
- Optimize the design – reduce weight, use cheaper materials

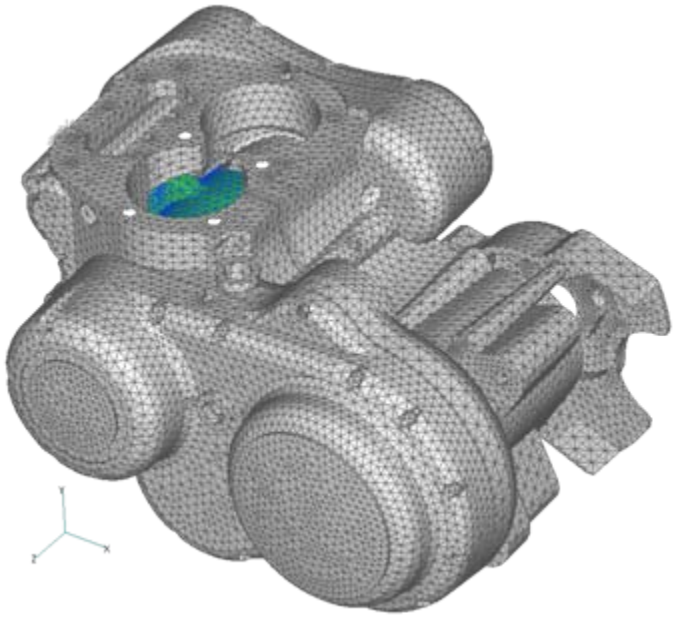

Design Process - Industry Trends

- Time to market – main focus
  - Reduce time to design, develop, and validate
  - Reduce cost, waste, and warranty returns
  - Increase quality
- How to achieve this
  - Streamline product development process
  - Bring simulation closer to the design stage
  - Analysis based design

Femap Defined

- Leader in cost effective high performance Finite Element Analysis (FEA) simulation with native Windows ease of use
  - Geometry import, creation, idealization and visualization
  - High performance meshing tools that can accurately and efficiently model real world structures
  - Comprehensive results presentation tools
- Sets new standards in open simulation
  - CAD independent – leverages the Parasolid modeling kernel
  - Solver independent – high level Nastran integration

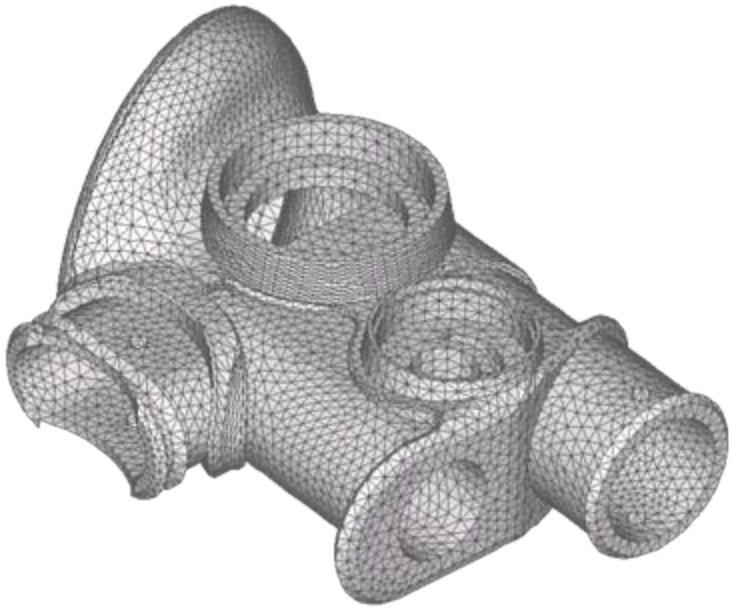

Independent Modeling Solution

loads, constraints, materials

internal solver technologies

results interpretation & correlation

Engineering Knowledge

I-DEAS
Solid Edge
SolidWorks
Unigraphics
AutoCAD
MicroStation
Pro/E
CATIA v4/v5

CAD

Results

Femap

NX Nastran
TMG
MSC.Nastran
ABAQUS
ANSYS
LS-DYNA
SINDA ...

Solvers

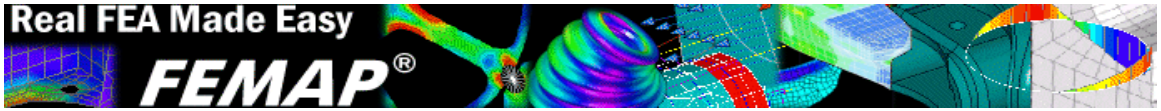

Femap – Real FEA Made Easy

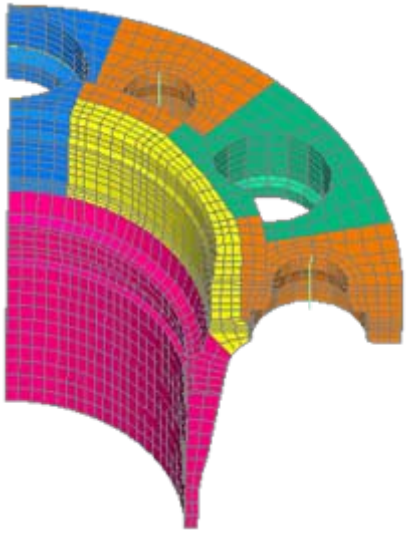

- World's leading advanced engineering analysis environment
  - Dedicated tool for engineering analysis
  - Written by engineers for engineers
- Widely used by the world's leading engineering organizations
  - Over 10,000 direct customers, all industries, all sizes
  - Over 10,000 OEM customers
- Powerful in-depth functionality
  - Solves challenging engineering problems quickly and easily

Femap – Real FEA Made Easy

- Easy to use intuitive user interface
  - Increased productivity – earlier to market
  - Reduced learning curve
  - Reduced training overhead
- Cost effective solution
  - The best price/functionality quotient in the industry

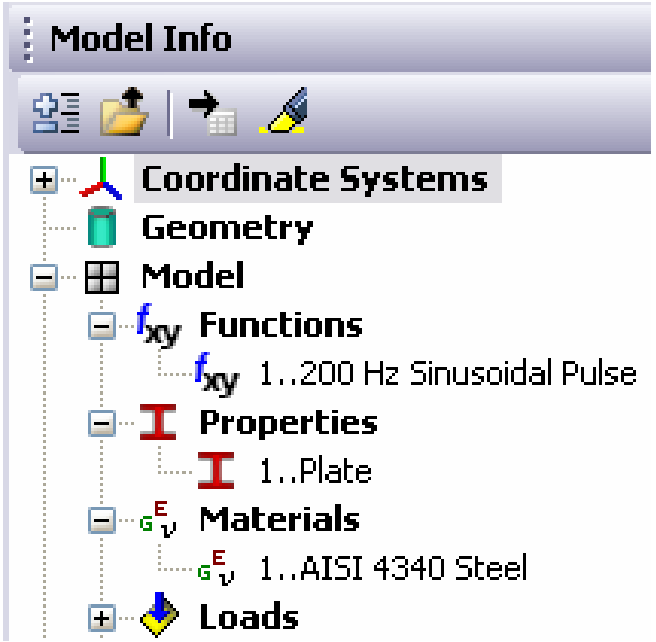

- Scalable to solve the most complex engineering problems
- High quality solution that ensures accurate results and robust usage

By bringing analysis closer to design, Femap speeds up time to market and helps transform the process of innovation

Femap – Background

Vision: easy to use FEA modeling

- 1985 – ESP founded
- 1999 – ESP acquired by SDRC
- 2001 – SDRC and UG merged into EDS
- 2004 – UGS spun off from EDS

- Initial pre-processing for MSC/PAL and MSC/NASTRAN
  - Now solver neutral – supports over 30 industry renowned solvers
- Exceptional acceptance in the engineering community
- Broad acceptance in all disciplines
- Resold and branded by a number of well know companies
  - MAYA TMG, NEiNastran Modeler, American Bureau of Shipping SafeHULL

NX Nastran Solver

- NASTRAN pedigree
  - **NA**SA **STR**uctural **AN**alysis
  - Developed to help design the Saturn V launch vehicle
  - First commercial version released in 1972 (MSC.Nastran)
- Premier CAE engineering tool
  - Wide range of analysis capabilities
  - Proven results quality
  - Used by all automotive and aerospace manufacturers and suppliers
  - Helps to obtain FAA certification
- UGS solution – NX Nastran – derived from MSC.Nastran in 2003

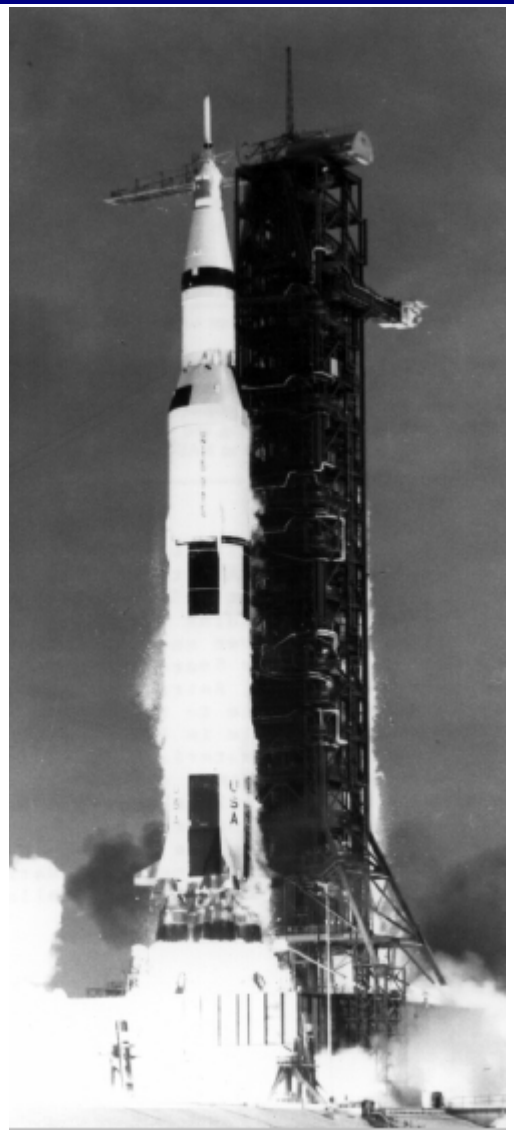

Analysis Process

- Geometric modeling (Solid Edge)
- Finite element modeling (Femap)
  - Apply loads
  - Apply boundary conditions
  - Create FE model (mesh)
  - Define material properties
- Analysis solution (NX Nastran)
- Results evaluation (Femap)
- Transfer knowledge back to CAD design (optimize)

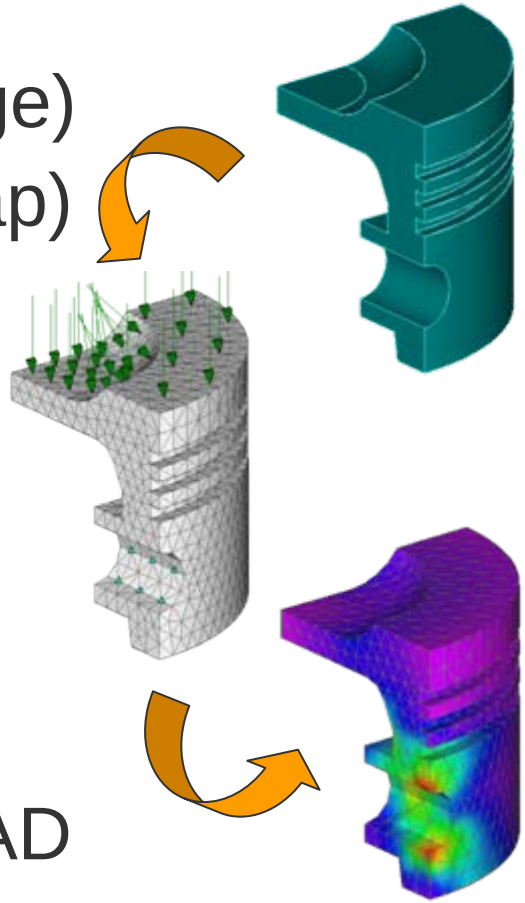

Analysis Product Interaction and Data Flow

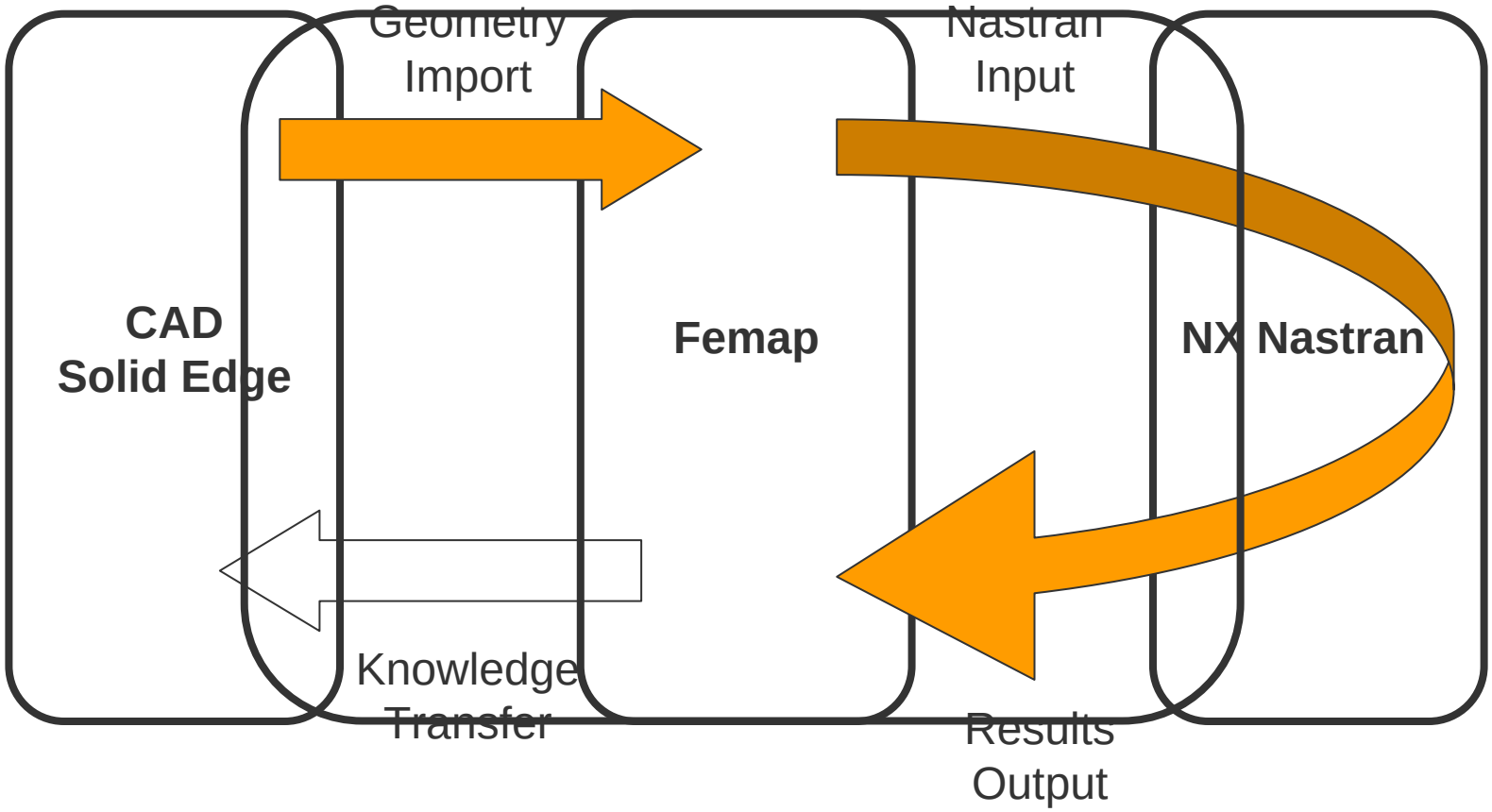

Femap's seamless and robust dataflow brings analysis closer to design

Analysis Based Design

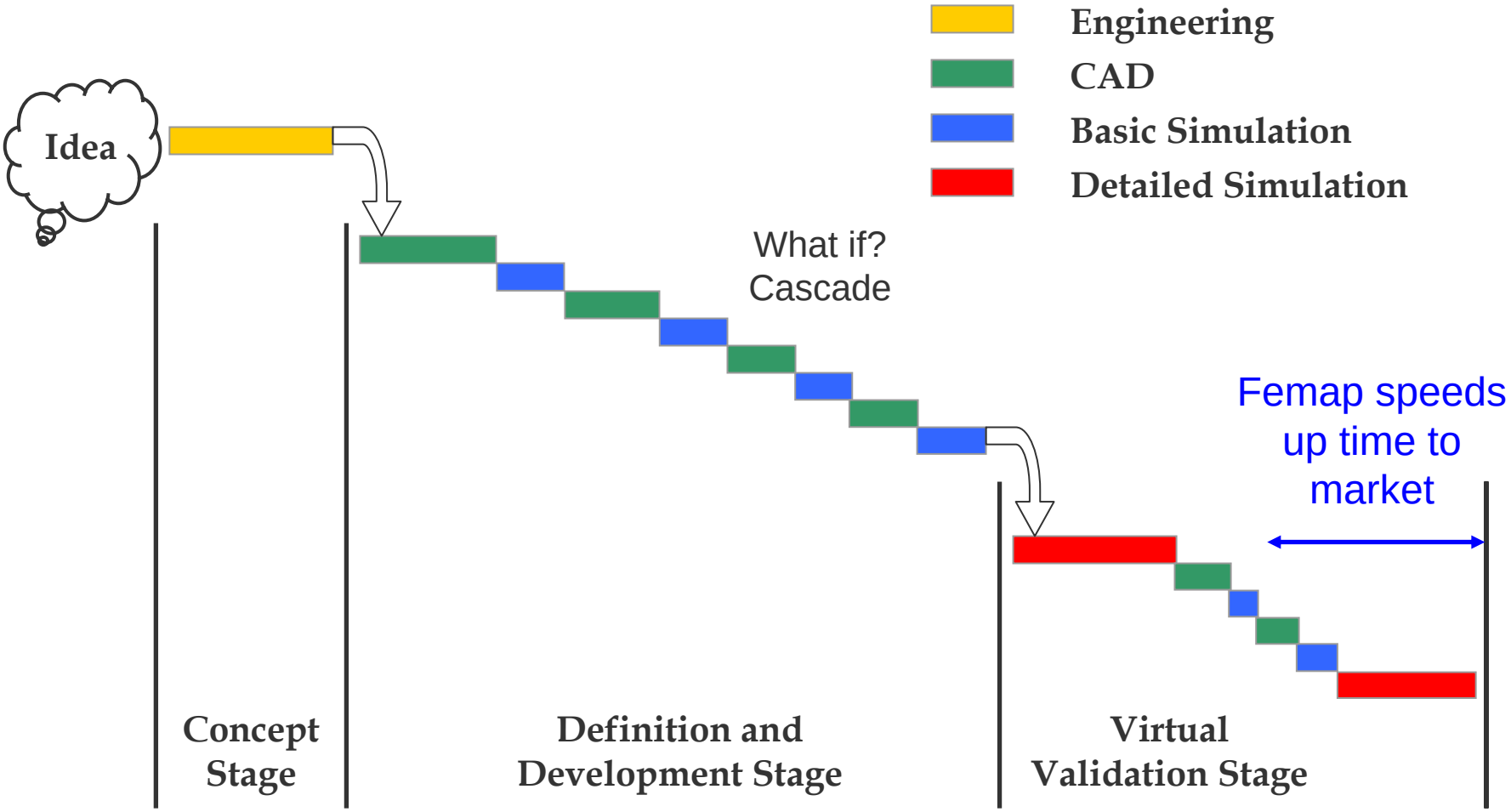

Latest Generation Windows UI

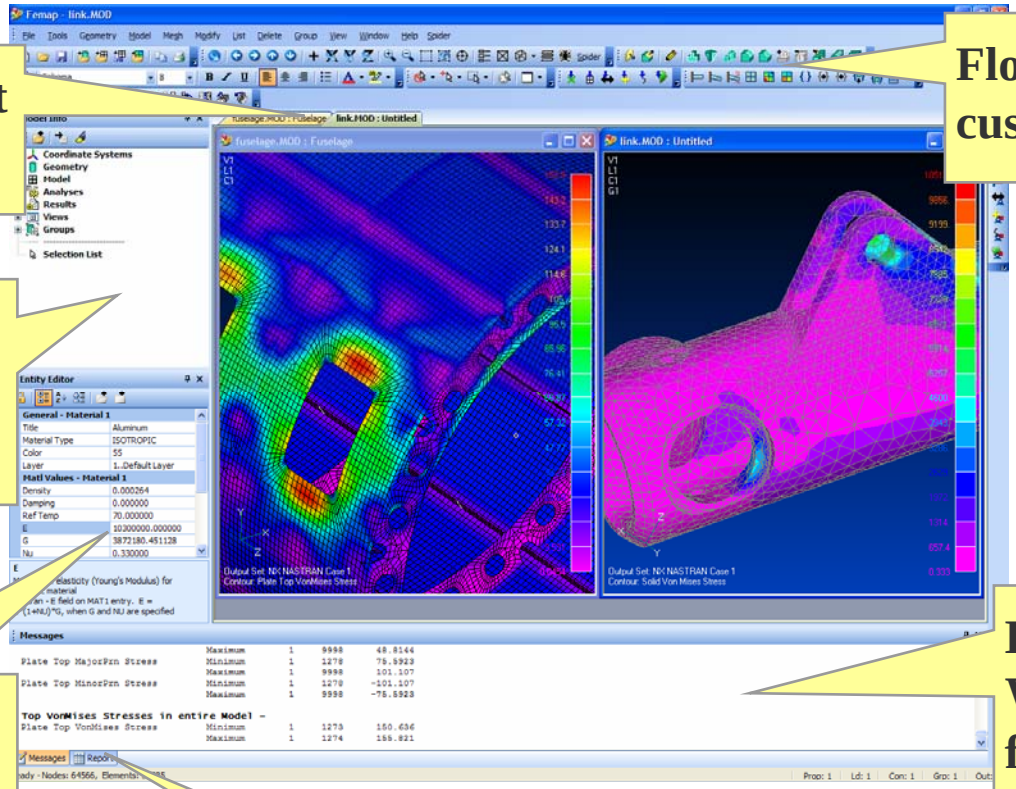

Multiple document (model) interface

Floating, dockable customizable toolbars

Model Tree View with context sensitive actions

Editable Messages Window with support for fonts, colors, and pasting of images

Top level Entity Editor with direct access to Femap entities

Data table and analysis monitor windows also available

Open Systems Simulation

CAD and Solver Integration

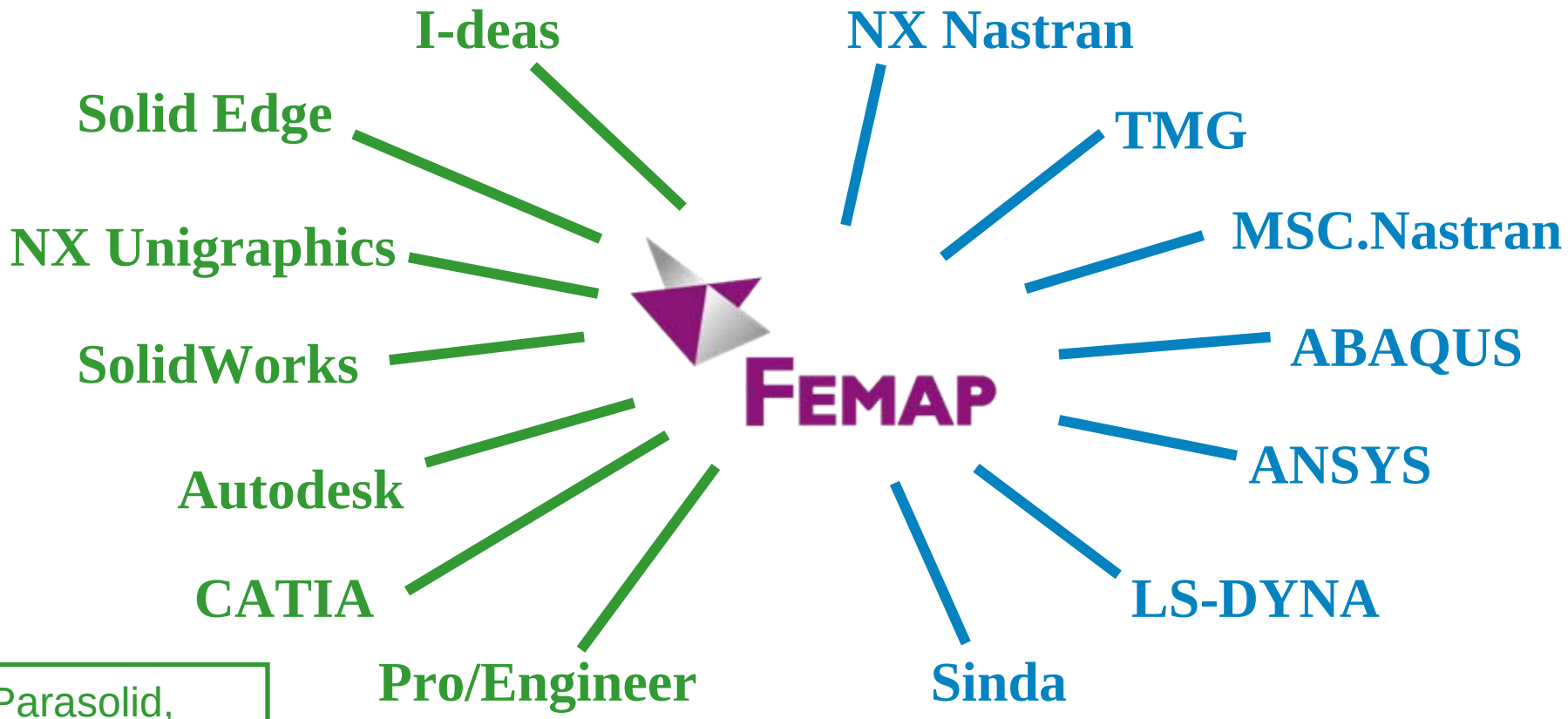

Parasolid, ACIS, STEP, IGES, VDA, DXF

CAD Neutral

Solver Independent

Powerful Modeling Tools

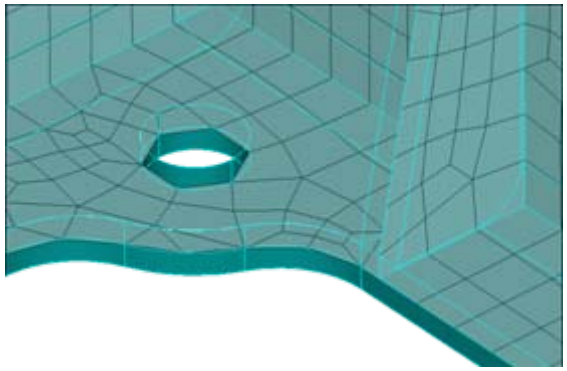

- Semi-automatic mid-surface extraction
  - Solid vs. shell
  - Size vs. accuracy

Solid - 53,240 Nodes

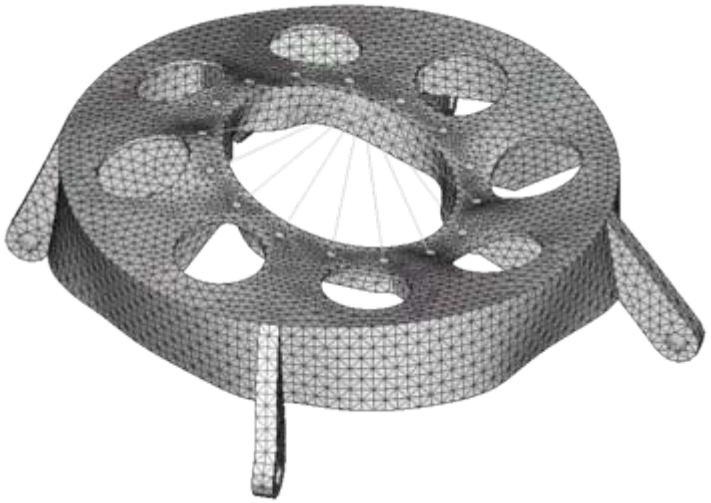

Shell - 11,069 Nodes

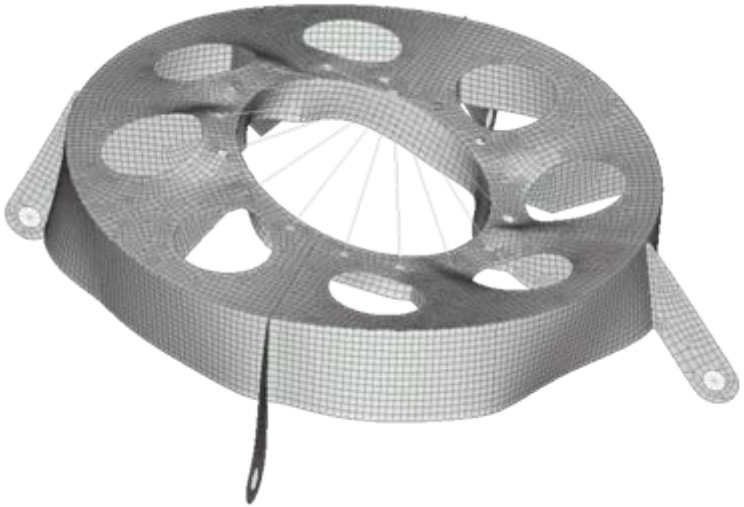

Powerful Modeling Tools

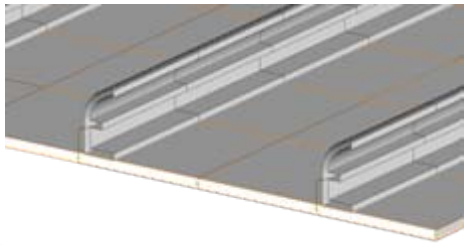

- Beam modeling and visualization
  - Verify correct beam orientation
  - Visualize offsets

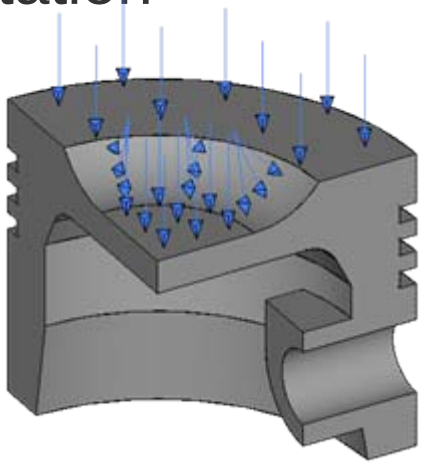

- Loads and constraints can be applied directly to geometry

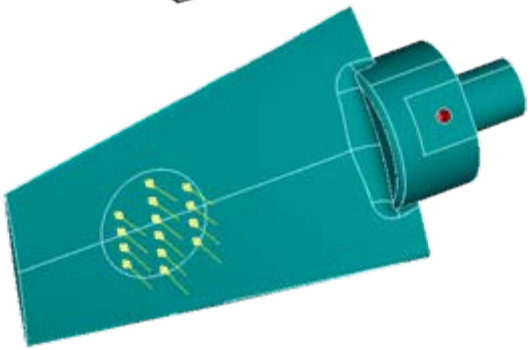

- Partition solids, define regions and hard points

Material Properties

- Support for isotropic and anisotropic materials
- Save material data in a material library
- Define composite materials and laminates
- Nonlinear materials
  - Including plastic, creep, hyperelastic
  - Function dependent (time, temperature)

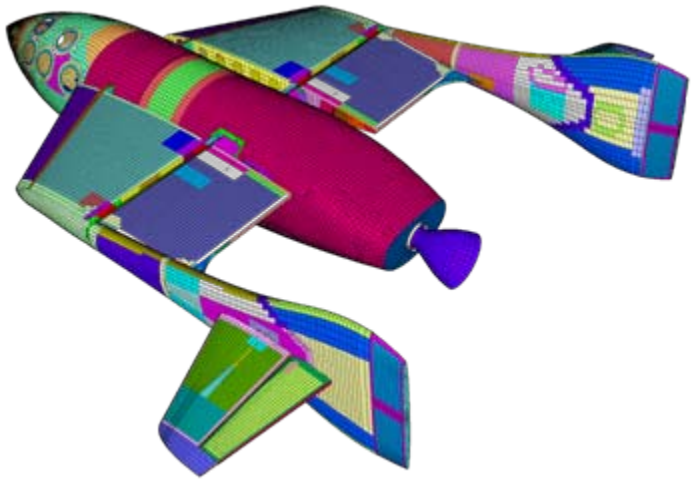

Powerful Modeling Tools

- Feature Suppression
  - Quickly remove unnecessary features
  - Automatic suppression for small insignificant features

Simplifies FE model minimizing element creation

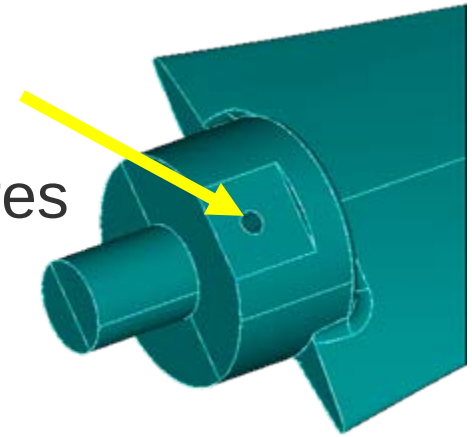

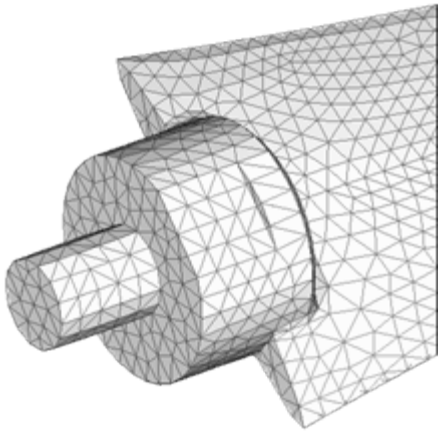

Intelligent Automatic Meshing

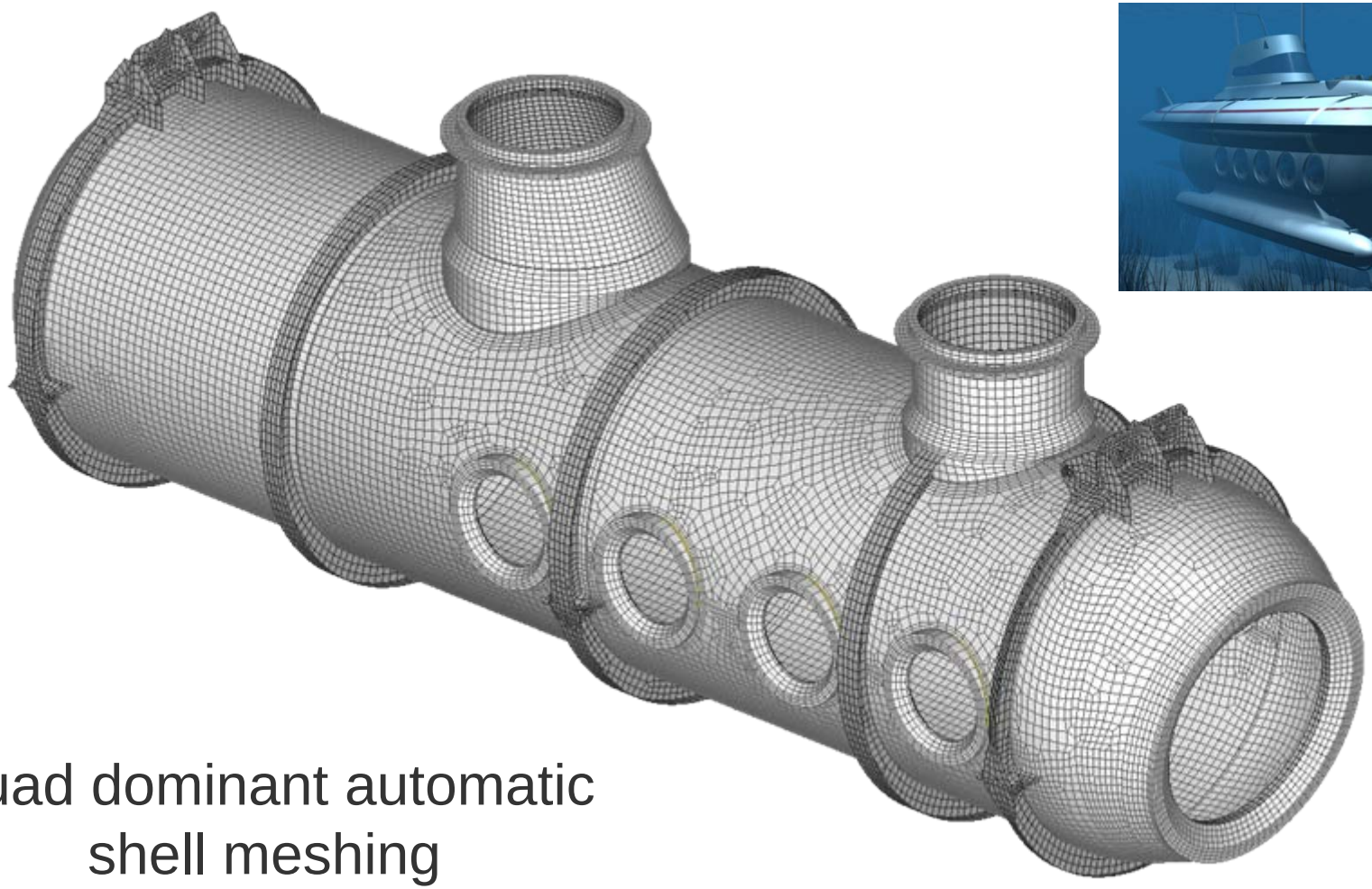

Quad dominant automatic shell meshing

Intelligent Automatic Meshing

Geometry sensitive triangle surface meshing

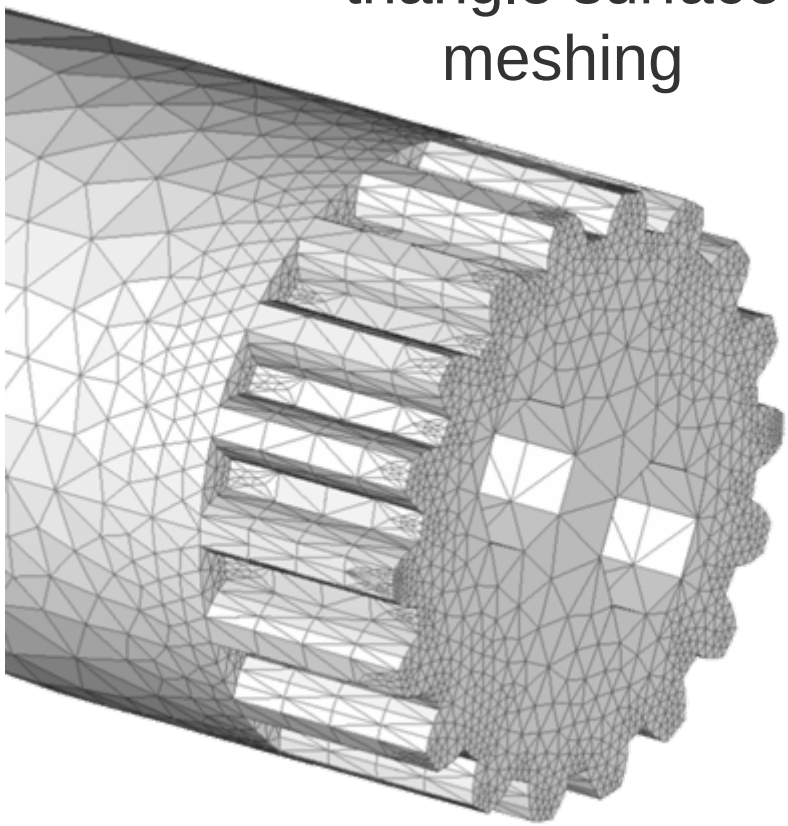

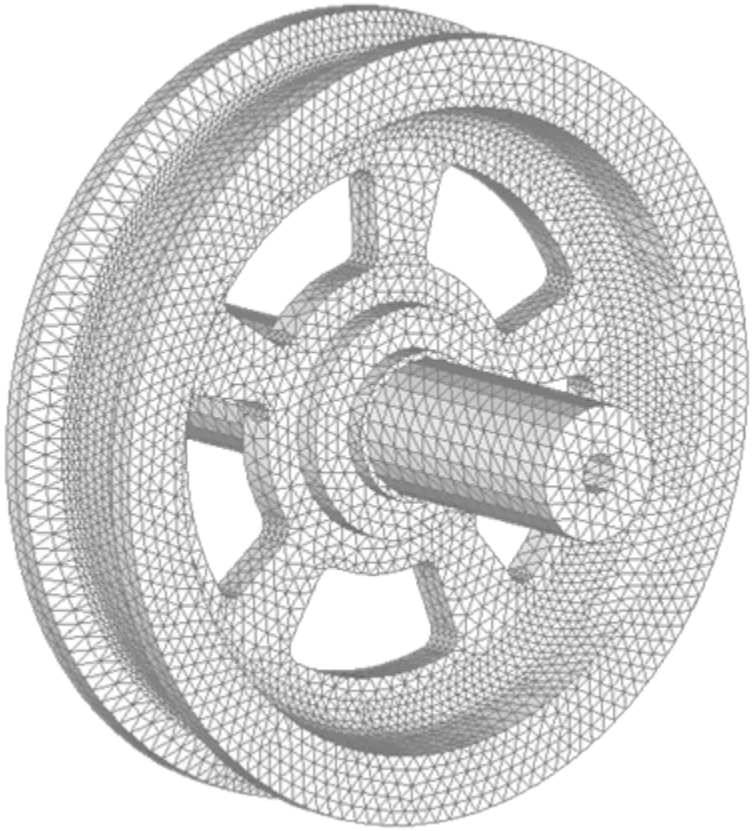

High-speed robust tetrahedral meshing

Powerful Meshing Tools

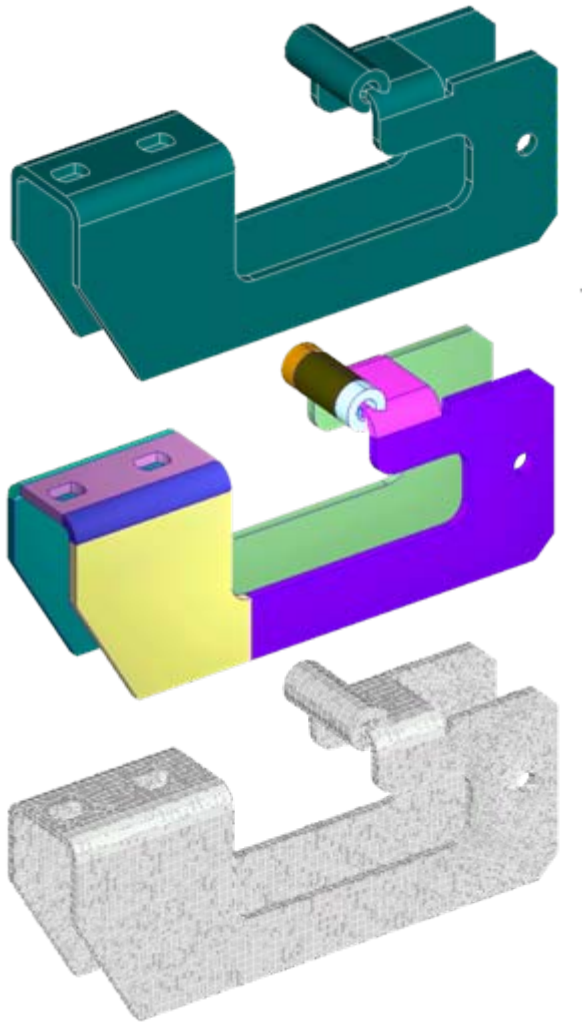

Semi-automatic hex meshing tools

Subdivide solid into hex-meshable regions

Recognizes extrudable areas

Automatically connects adjacent regions to complete mesh

Powerful Meshing Tools

- Combine multiple surfaces
  - To create a smoother more regular mesh

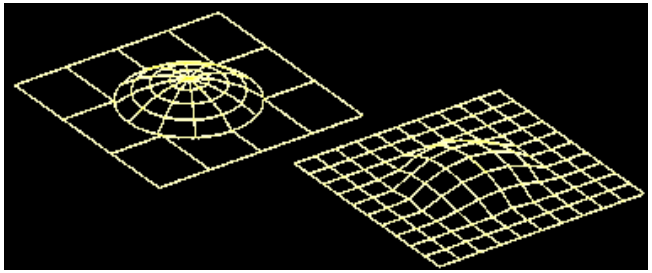

- Automatic processing of sliver surfaces
  - Cleans up geometry to ensure a smooth regular

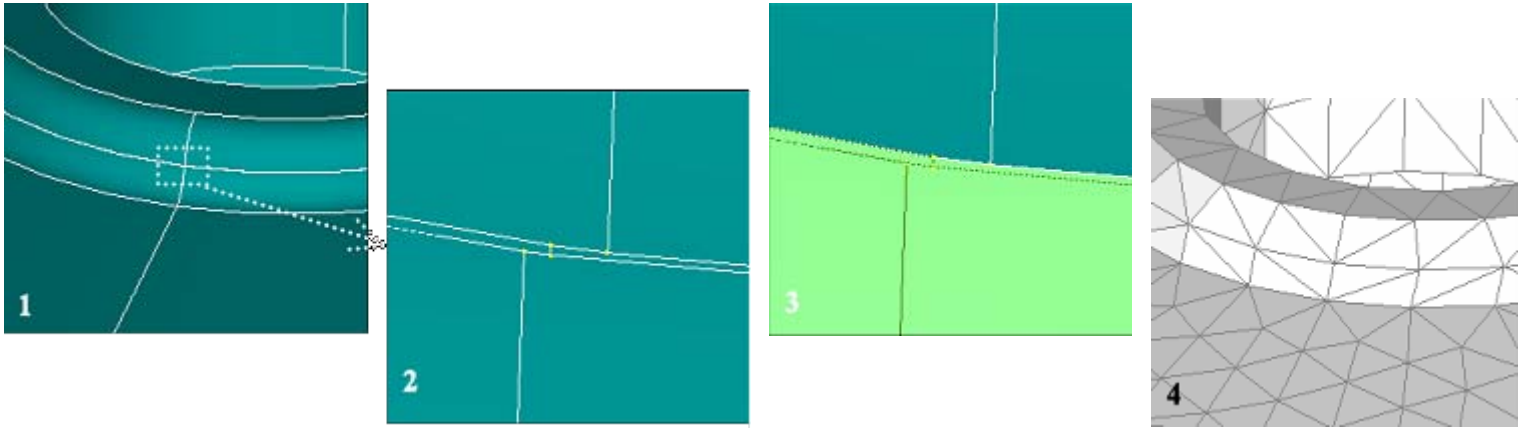

Assemblies Support

Automatic surface contact detection

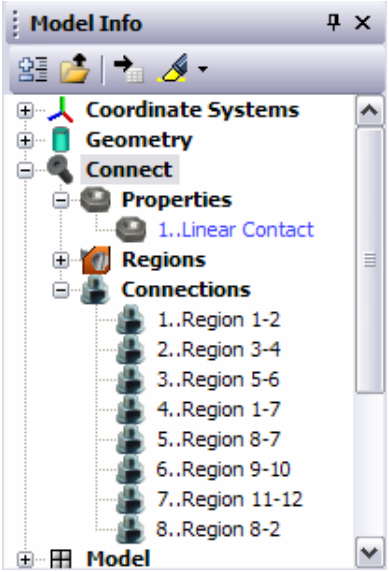

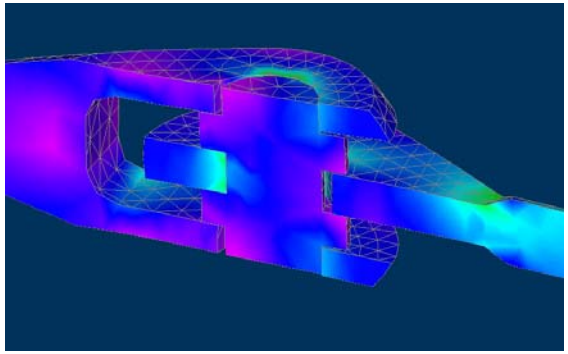

Linear surface contact

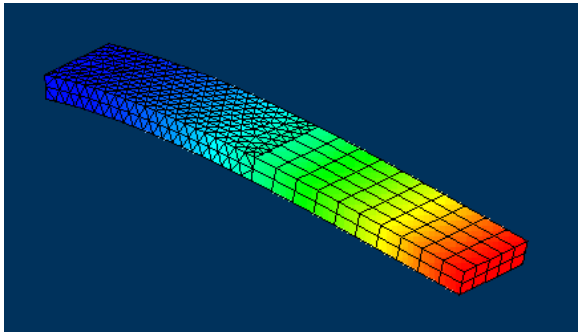

Glued connection

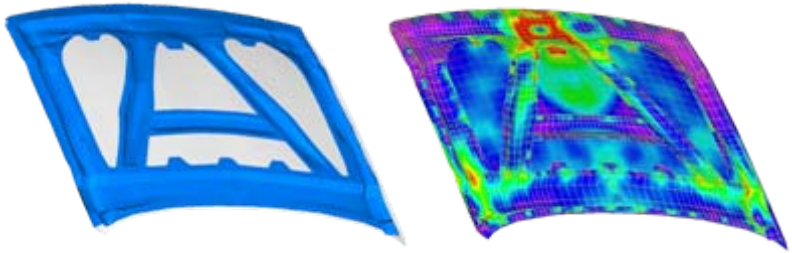

CWELD fastener support

Detailed Model Checkout

- Clear, visible and detailed model checkout ensures model correctness prior to analysis
  - Coincident nodes and merge options
  - Element distortion
  - Coincident elements
  - Free edges and faces
  - Loads and constraints
  - Sum forces
  - Mass properties

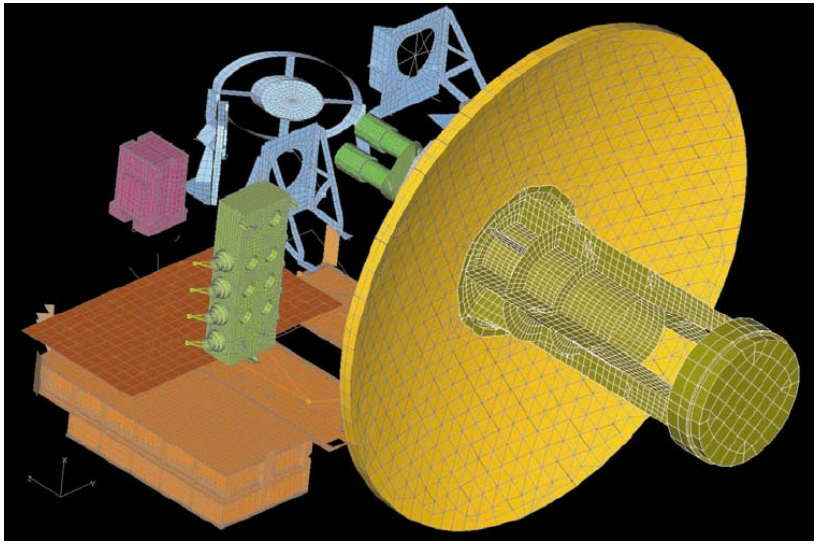

Open Systems Analysis

In-depth support for leading solvers, multiple applications

- Nastran (NX, MSC, NEi)
  - Complete ready to run files; binary results import (OP2, XDB)
  - Solution managed and controlled by Femap
- ABAQUS
  - Contact, advanced materials, standard and explicit
  - Deformable, rigid body contact, hyperelastic materials
- ANSYS
  - Linear, nonlinear, thermal
- LS-DYNA
  - Part to part contact, user defined materials
- TMG
  - Advanced thermal, conduction, convection radiation
  - Fluid flow

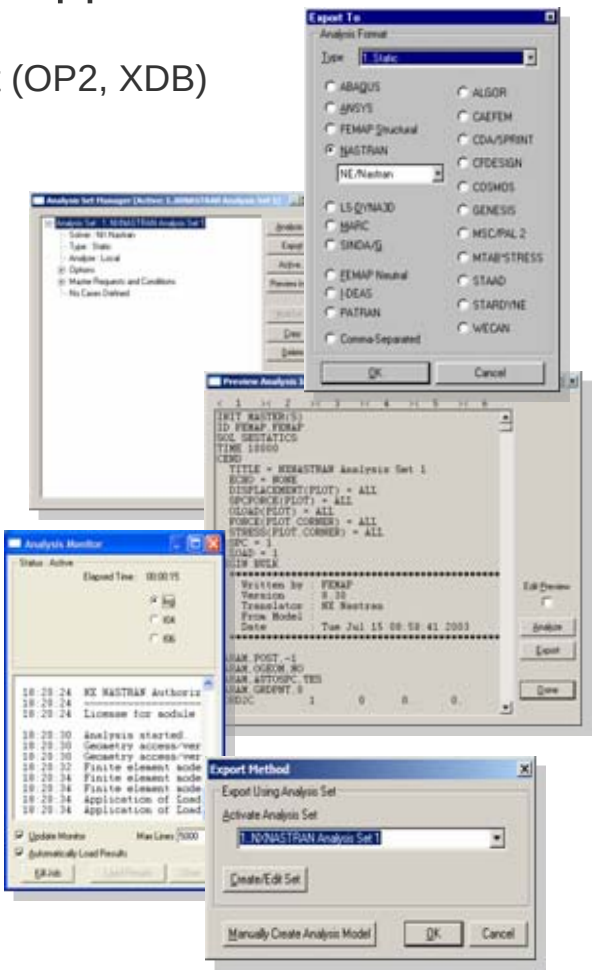

Advanced Post-Processing Tools

- Animation
- Dynamic cutting plane
- Dynamic isosurface
- Full output control
- Flexible results selection
- Grid point forces
- Support for BMP, JPG, WMF, AVI, and VRML file creation
- JT file creation

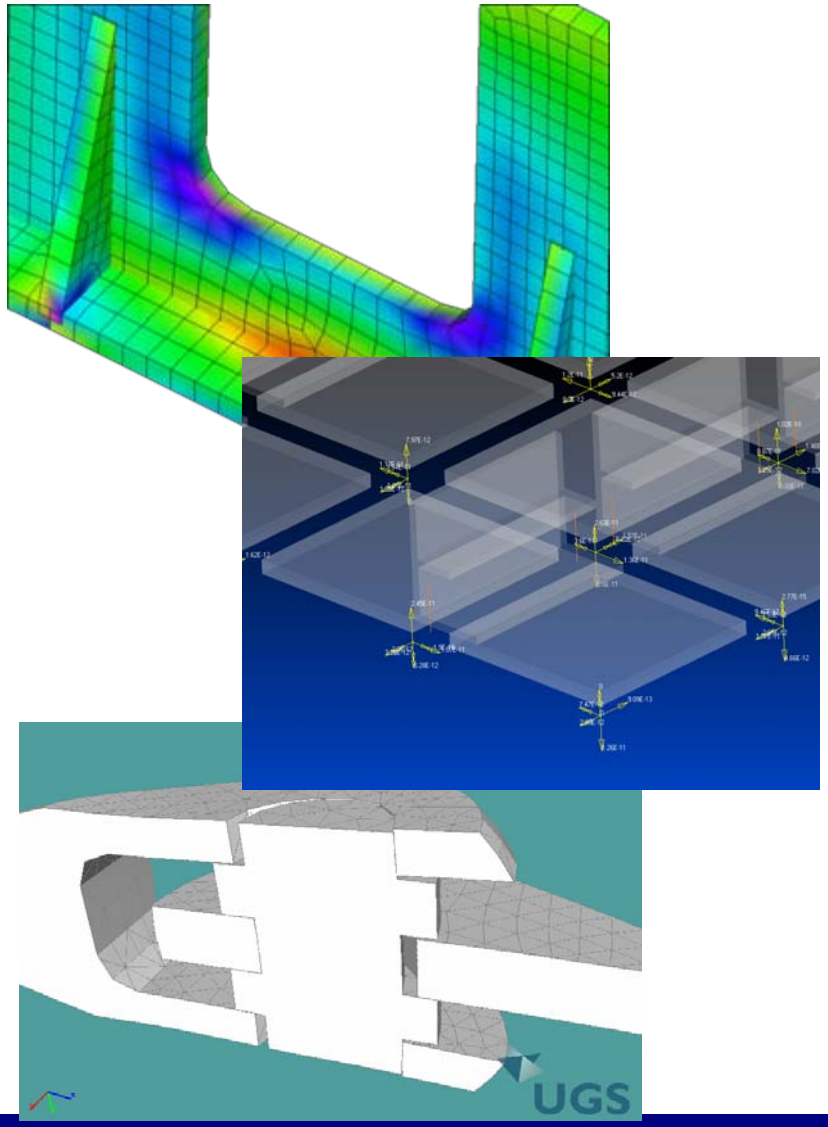

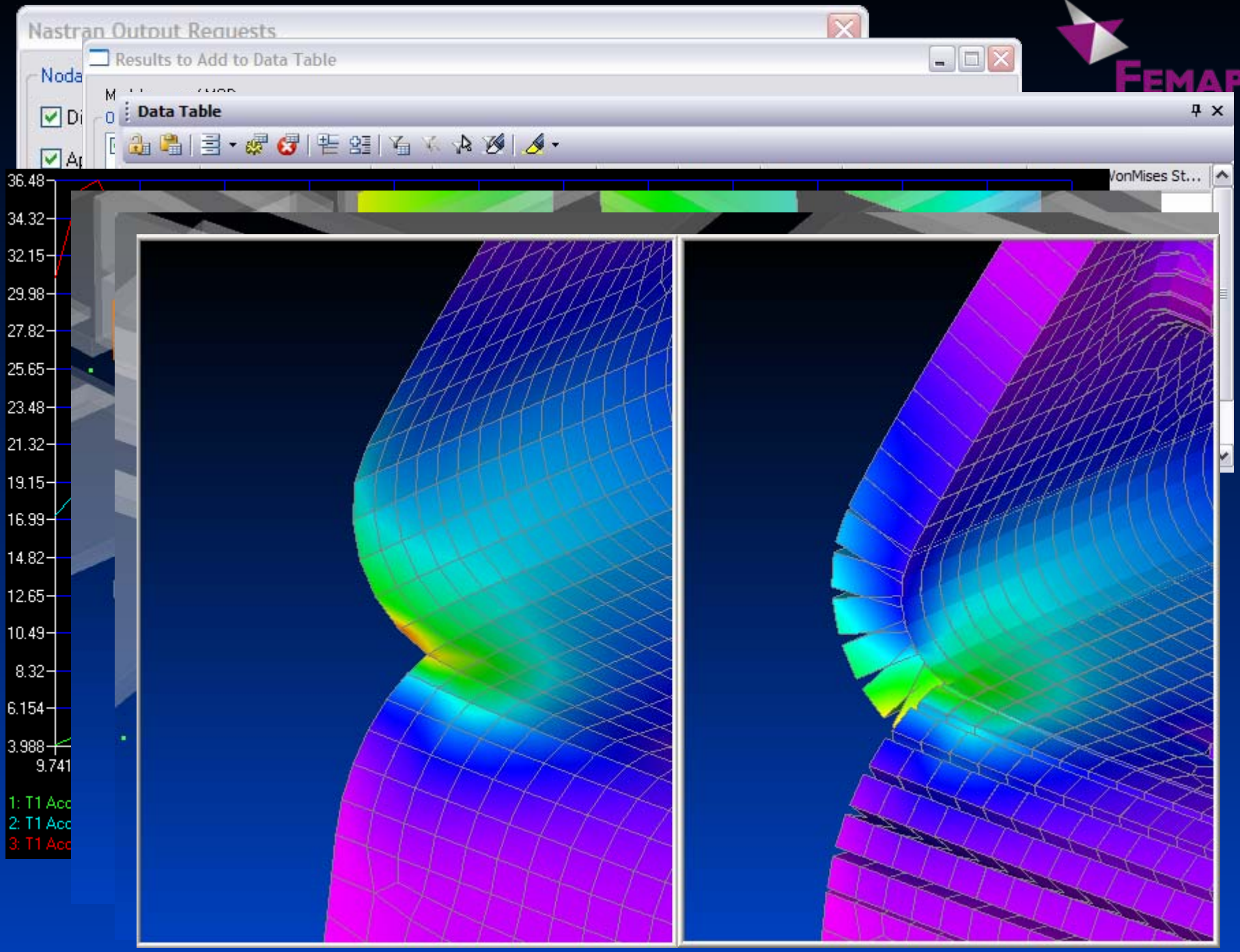
Nastran Output Requests
Results to Add to Data Table
Data Table
VonMises St...
36.48
34.32
32.15
29.98
27.82
25.65
23.48
21.32
19.15
16.99
14.82
12.65
10.49
8.32
6.154
3.988
9.741
1: T1 Acc
2: T1 Acc
3: T1 Acc

Scalable Product Configuration

- Femap Express within Solid Edge
- Femap standalone – pre- post only, no solver
  - Customer has Nastran or another solver on a server
- Femap with NX Nastran – bundled solution
  - Complete self-contained solution for basic analysis
- Add on NX Nastran for Femap solver modules
  - Add on more advanced types of analysis
- Femap with advanced solvers
  - Thermal analysis and CFD

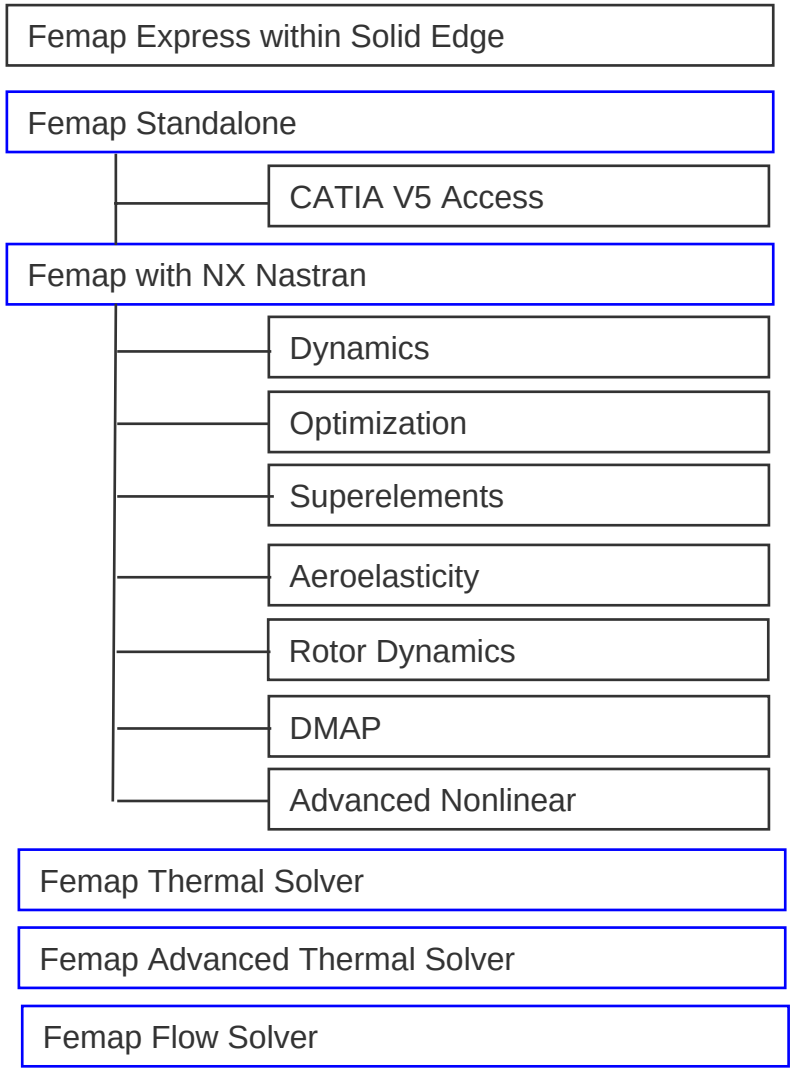

Femap with NX Nastran

- Femap with NX Nastran includes the following analysis types
  - Linear statics
  - Normal modes
  - Buckling
  - Heat transfer
  - Basic nonlinear
  - Linear Contact NEW
  - Glued Connection NEW
  - CWELD fastener connectors
  - Fast iterative solver

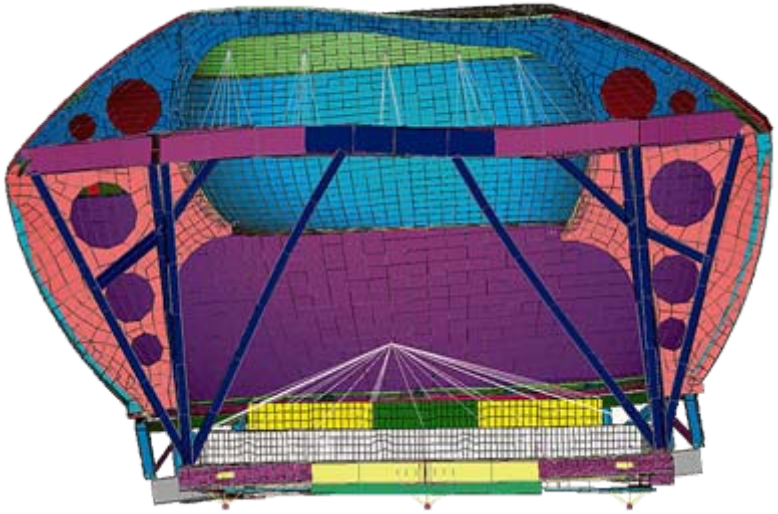

Flight Simulator
Normal Modes Analysis

Femap with NX Nastran

Heat Transfer

- Steady state and transient
- Linear and nonlinear
- Conduction, convection and radiation
- Temperature dependent material properties and loads

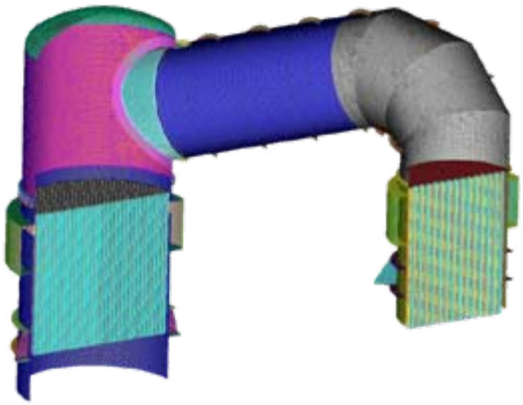

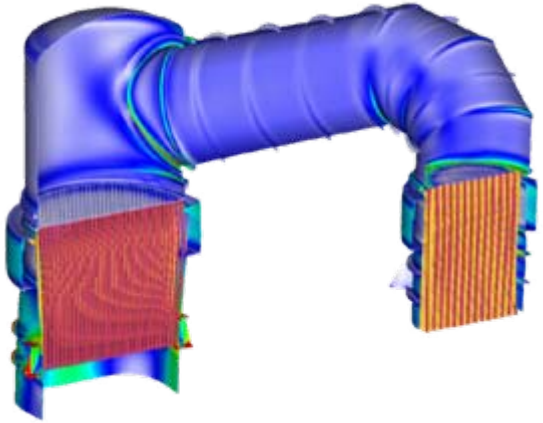

Femap with NX Nastran

Basic Nonlinear

- Static and direct transient
- Material nonlinearity
- Geometric nonlinearity
- Slideline and gap contact
- Creep
- Automated solution methods
- Compatibility with linear analysis

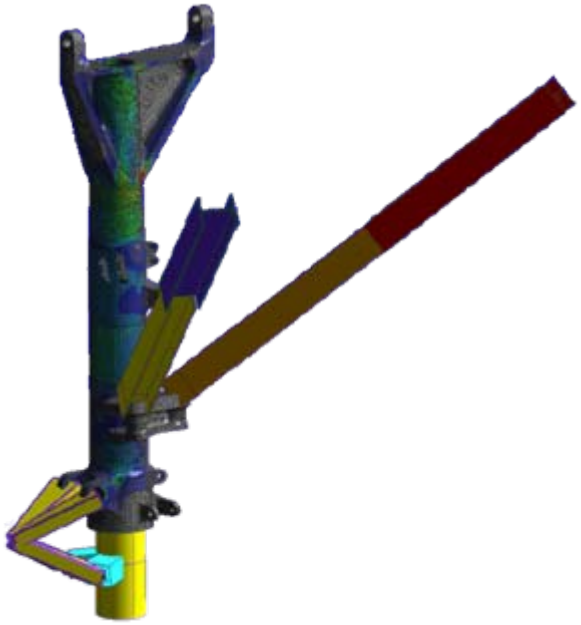

Femap with NX Nastran Modules

- NX Nastran for Femap add-on modules include:
  - Dynamics
  - Optimization
  - Superelements
  - Aeroelasticity
  - DMAP
  - Advanced Nonlinear

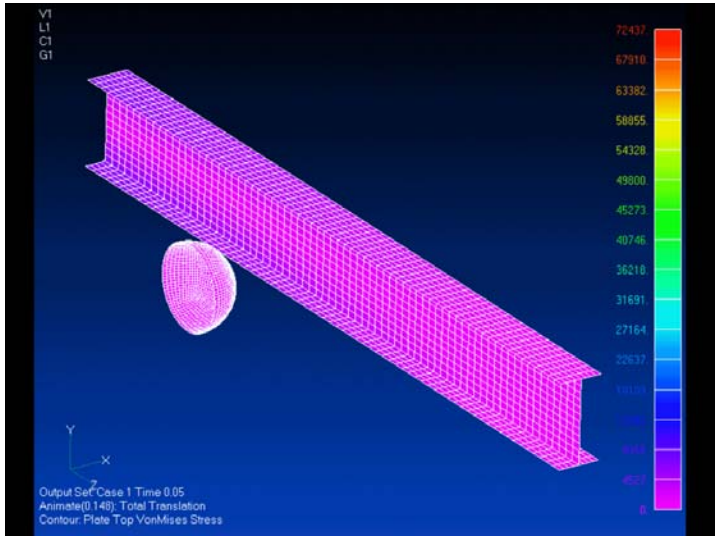

Advanced Nonlinear – beam analysis with contact and nonlinear materials

Femap with NX Nastran Modules

Dynamics

- Transient response
- Frequency response
- Random response
- Modal and direct methods
- Enforced motion

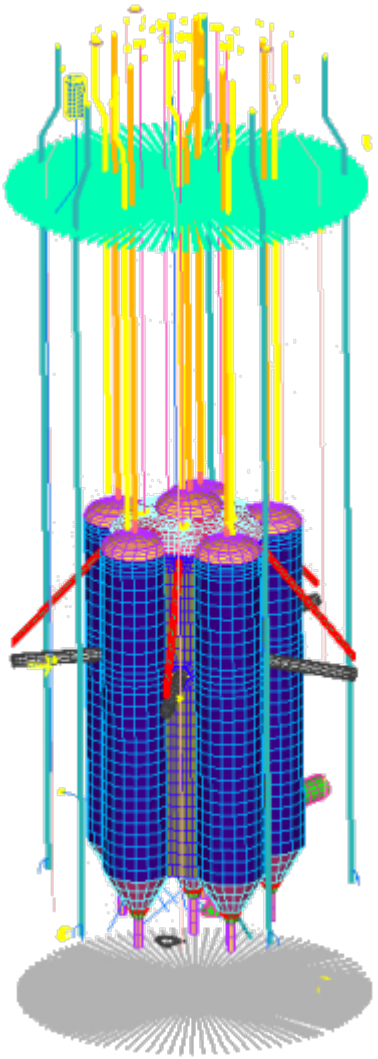

Femap with NX Nastran Modules

Optimization

- More efficient designs with maximum margins of safety
- Trade-off studies
- Design sensitivity studies
- Test-analysis correlation

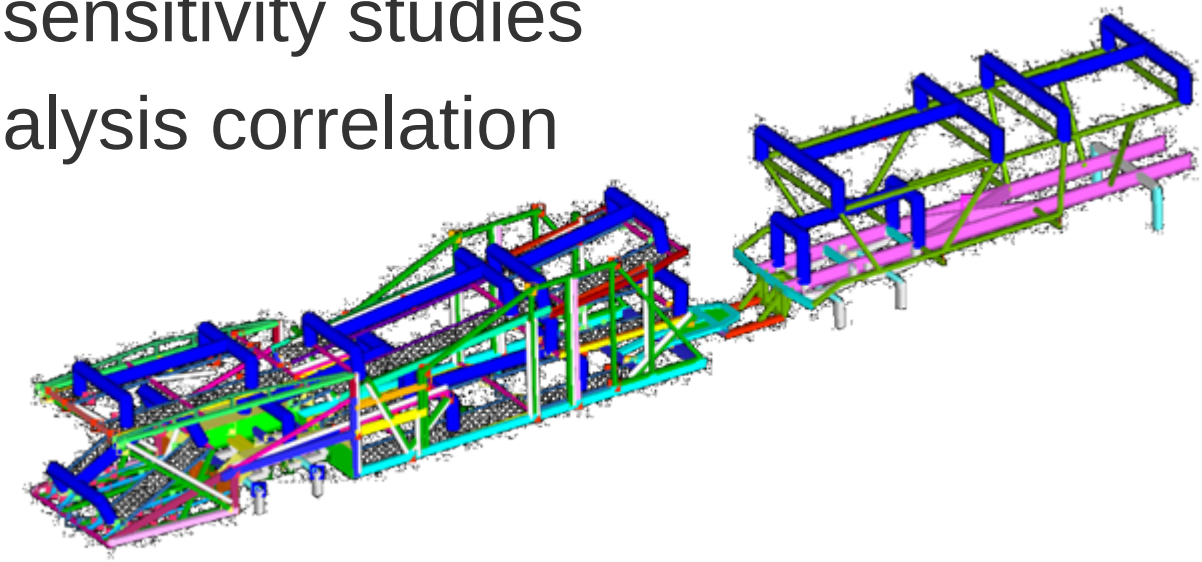

Femap with NX Nastran Modules

- **Superelements**
  - Substructuring
  - External superelements – confidential data transfer
- **Aeroelasticity**
  - Flutter analysis
- **DMAP**
  - Direct Matrix Abstraction Program
  - Customization, user defined solutions

Femap with NX Nastran Modules

- **Advanced nonlinear**
  - Implicit solver
    - Large deformation
    - Nonlinear materials
    - Time dependent loads
    - Deformable contact
  - Explicit integration (NX 4)
    - High velocity impact analysis
    - Explicit nonlinear time integration

High velocity short duration impact analysis using explicit time integration

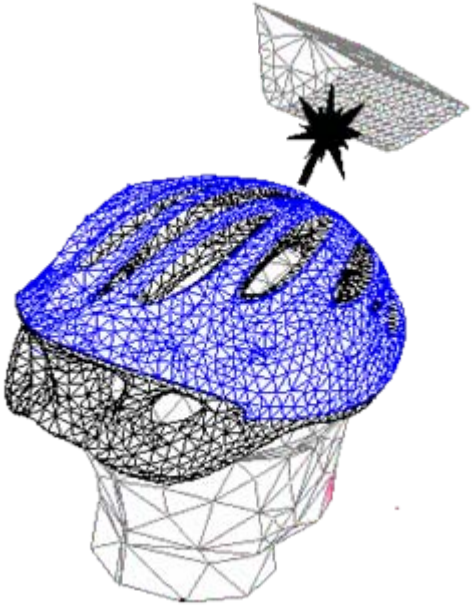

Advanced Solver Modules

- Femap Thermal solver
  - Comprehensive heat transfer simulation package
- Femap Advanced thermal solver
  - Advanced suite of thermal simulation extensions to the Femap Thermal solver

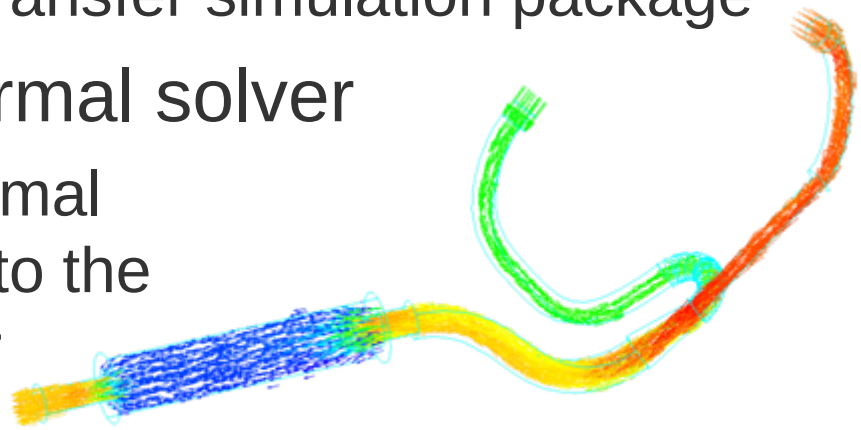

- Femap Flow solver
  - Fully integrated and comprehensive 3D computational fluid dynamics (CFD) solution

Q&A

Thank You!