Using I-deas NX for Trajectory Analysis

PLM World 2006 Conference

May 11th, 2006

Jim Hyde / Barrios Technologies ESCG

james.l.hyde1@jsc.nasa.gov

Background

- During ascent of the STS-107 mission (T+82 sec), the port side External Tank (ET) bipod ramp broke off from the tank and struck the wing leading edge of the Orbiter
- Estimated dimensions of the foam debris: 20” x 12” x 6”

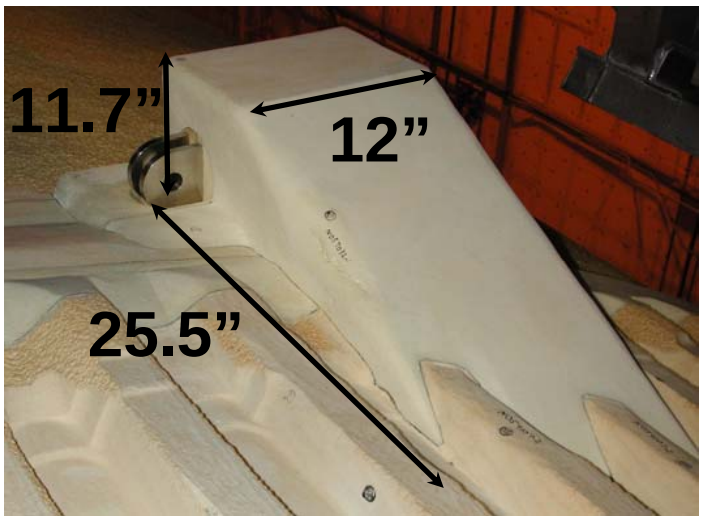

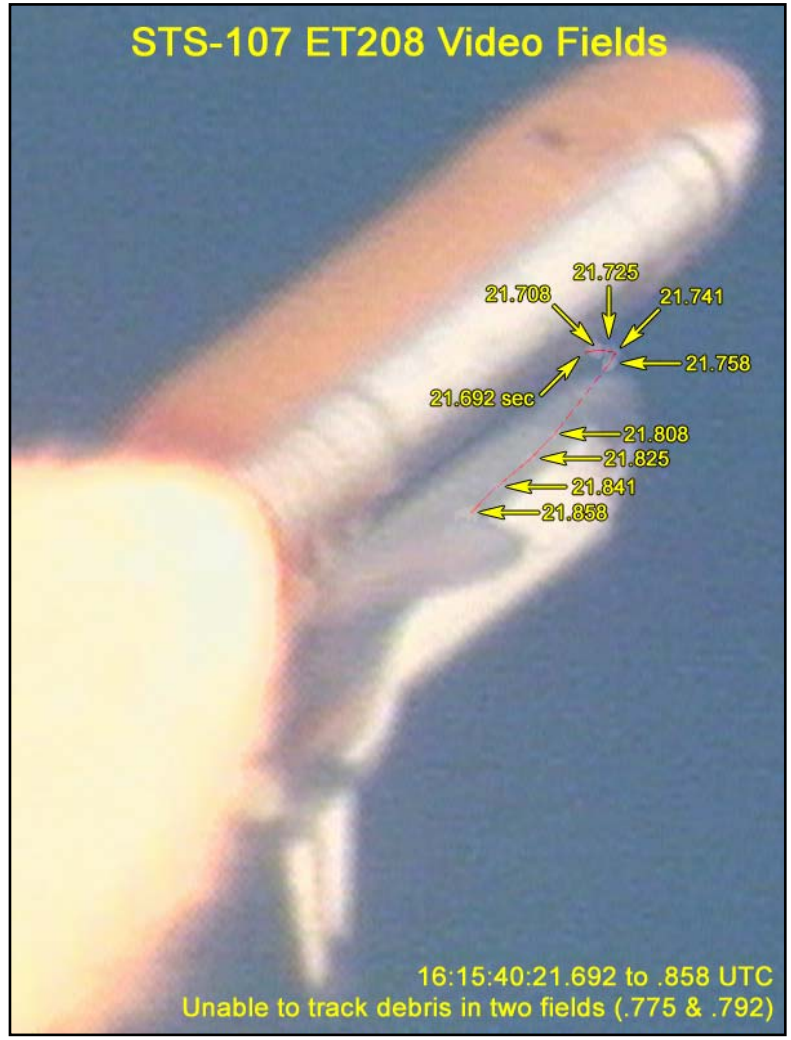

Background

- **Photo summary input:**
  - ➔ Size: 15±3 x 24±3 x 5±1 inches
  - ➔ Source of debris: bi-pod ramp
  - ➔ Velocity 610-840 ft/sec
  - ➔ Multiple debris, but only one piece strikes the wing
  - ➔ Orientation indeterminate
  - ➔ Chunks of material in debris field
  - ➔ Location of impact RCC panels 5-7
  - ➔ Specific location of impact varies greatly on the panel

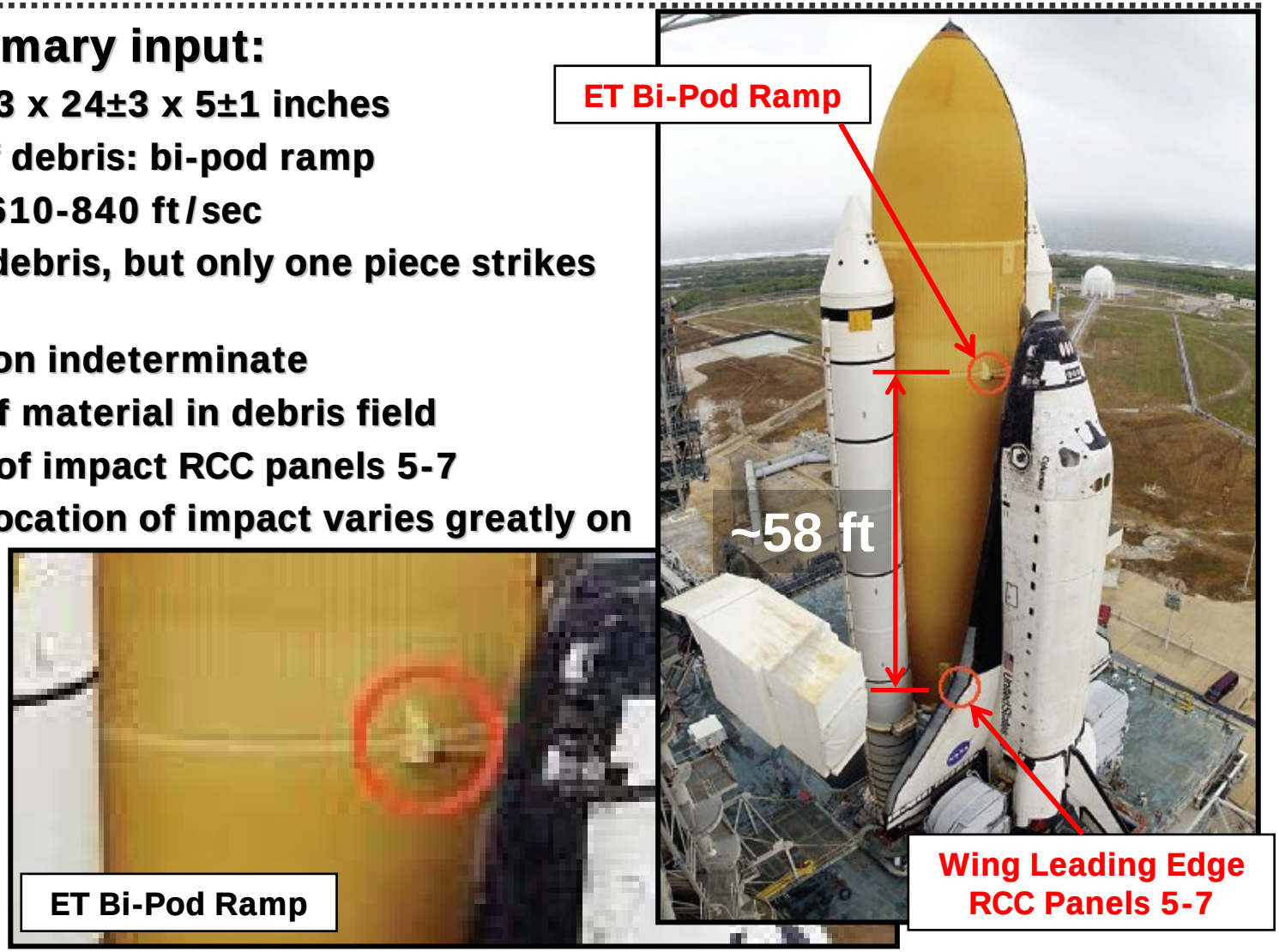

Orbiter Thermal Protection System (TPS): Tile and RCC

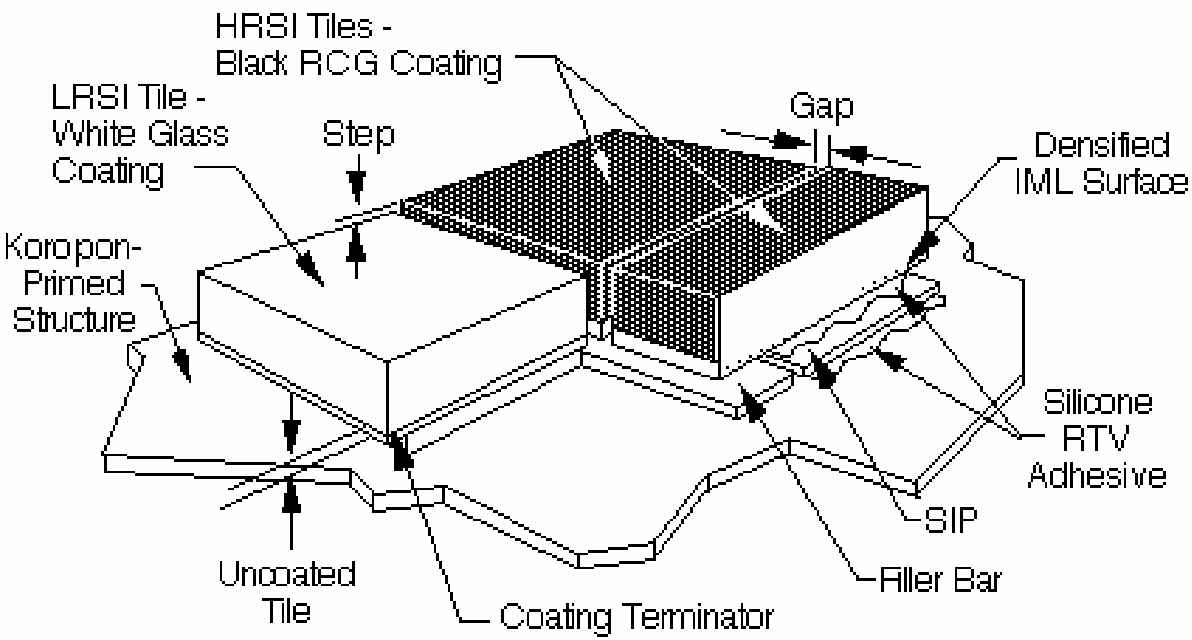

←TPS tile consists of a porous substrate of silica fibers coated with glass

Reinforced carbon-carbon → (RCC) is a pyrolyzed carbon fiber-carbon matrix composite. The inner and outer surfaces are silicon carbide produced by consuming a portion of the substrate

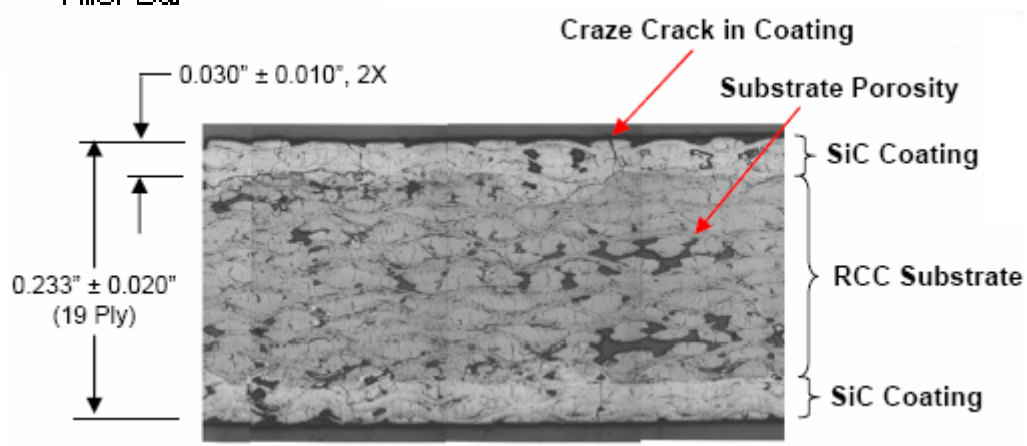

Impact Response of Materials

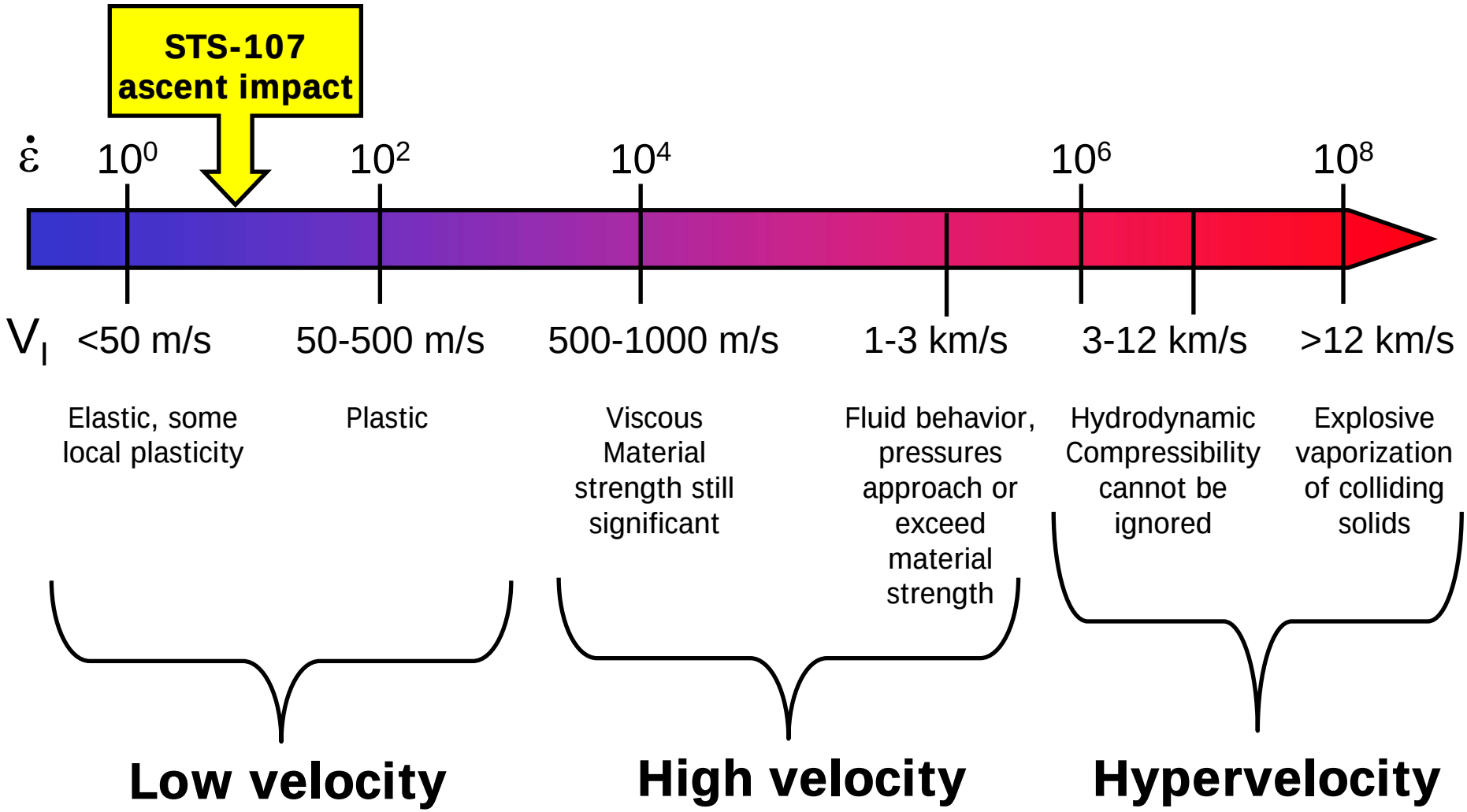

Impact Test Articles

LESS: Accident Investigation

Tile acreage: Return to Flight

T-35 : Return to Flight

MLGD thermal barrier : Return to Flight

Compressed Gas Guns

Fast Acting Valve
Used to fire the gun

Valve Air Supply Tank

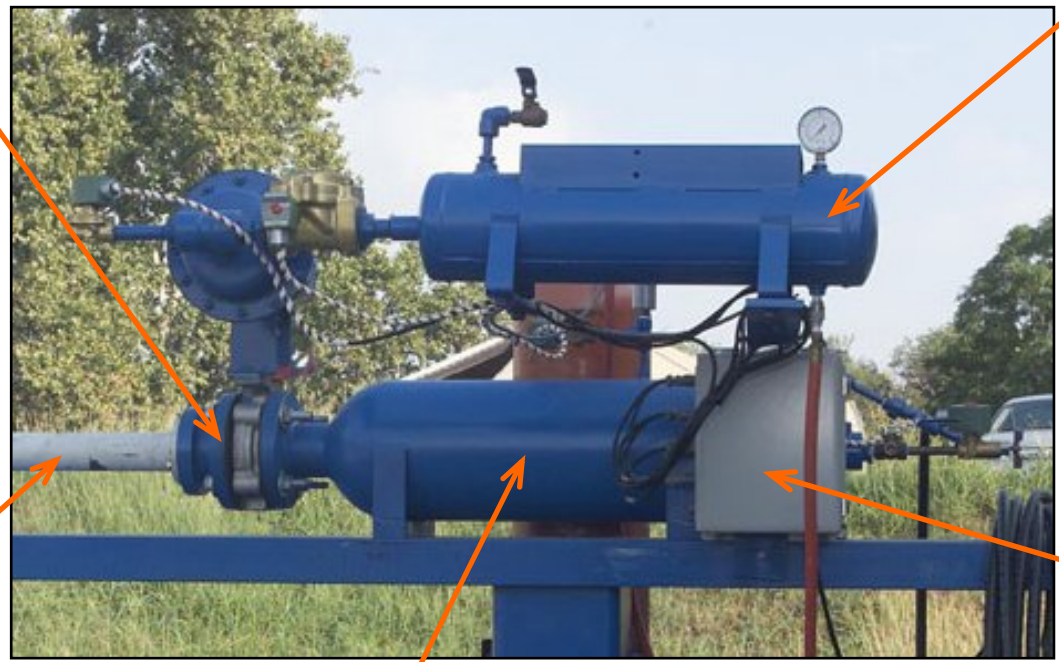

Barrel

Gun Controls

Pressure Tank
with Nitrogen or Helium

Large Compressed Gas Gun (500 Gallon Tank)

Used to launch ET Foam (800 – 2000 fps)
35 and 40-foot Steel or Aluminum Barrels with rectangular cross sections
Car/bus lift used for vertical adjustment
Air bearings for lateral and yaw adjustment

→ **Important!**

Columbia Accident Investigation: Full Scale RCC Tests

- **RCC Panel 6L**
  - ➔ Material: BX 250 foam
  - ➔ Dimensions: 5.63” x 11.56” x 21.38”
  - ➔ Volume: 1391.5 in^3
  - ➔ Mass: 763.8 g (1.68 lb)
  - ➔ Launch velocity: 768 ft/sec
  - ➔ CG angle of impact: 20.6º

- **RCC Panel 8L**
  - ➔ Material: BX 250 foam
  - ➔ Dimensions: 5.63” x 11.5” x 22.56”
  - ➔ Volume: 1,460.6 in^3
  - ➔ Mass: 762.9 g (1.68 lb)
  - ➔ Launch velocity: 777 ft/sec
  - ➔ CG angle of impact: 25º

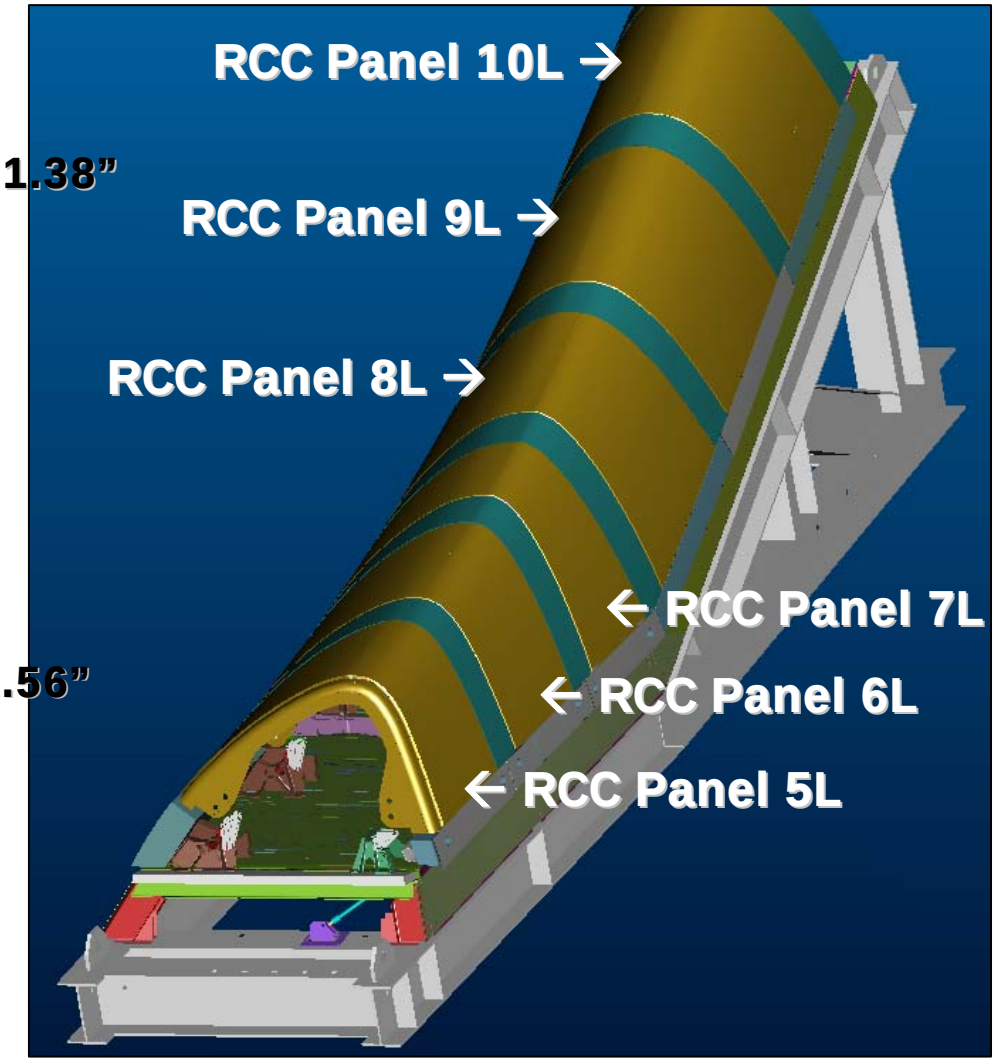

Full Scale RCC Tests: Aim Point Procedure

- **Given:**
  - ➔ **Impact point on target**
  - ➔ **Projectile size, orientation & initial contact point**
- **Need:**
  - ➔ **Two aim point locations for gas gun orientation**
- **Procedure:**
  - ➔ **Field survey**
    - Verify model integrity relative to test article
    - Establish "benchmark" points between model & test article
  - ➔ **Insert projectile - orient roll, pitch & yaw**
  - ➔ **Establish "flight line" through forward and aft faces of projectile**
  - ➔ **Aim point #1: create point at intersection of flight line and target surface**
  - ➔ **Aim point #2**
    - Project flight line along normal to benchmark surface (line A)
    - Create line B normal to benchmark surface originating at end of line A
    - Create aim point #2 at intersection of line B & flight line

Procedure – Field Survey

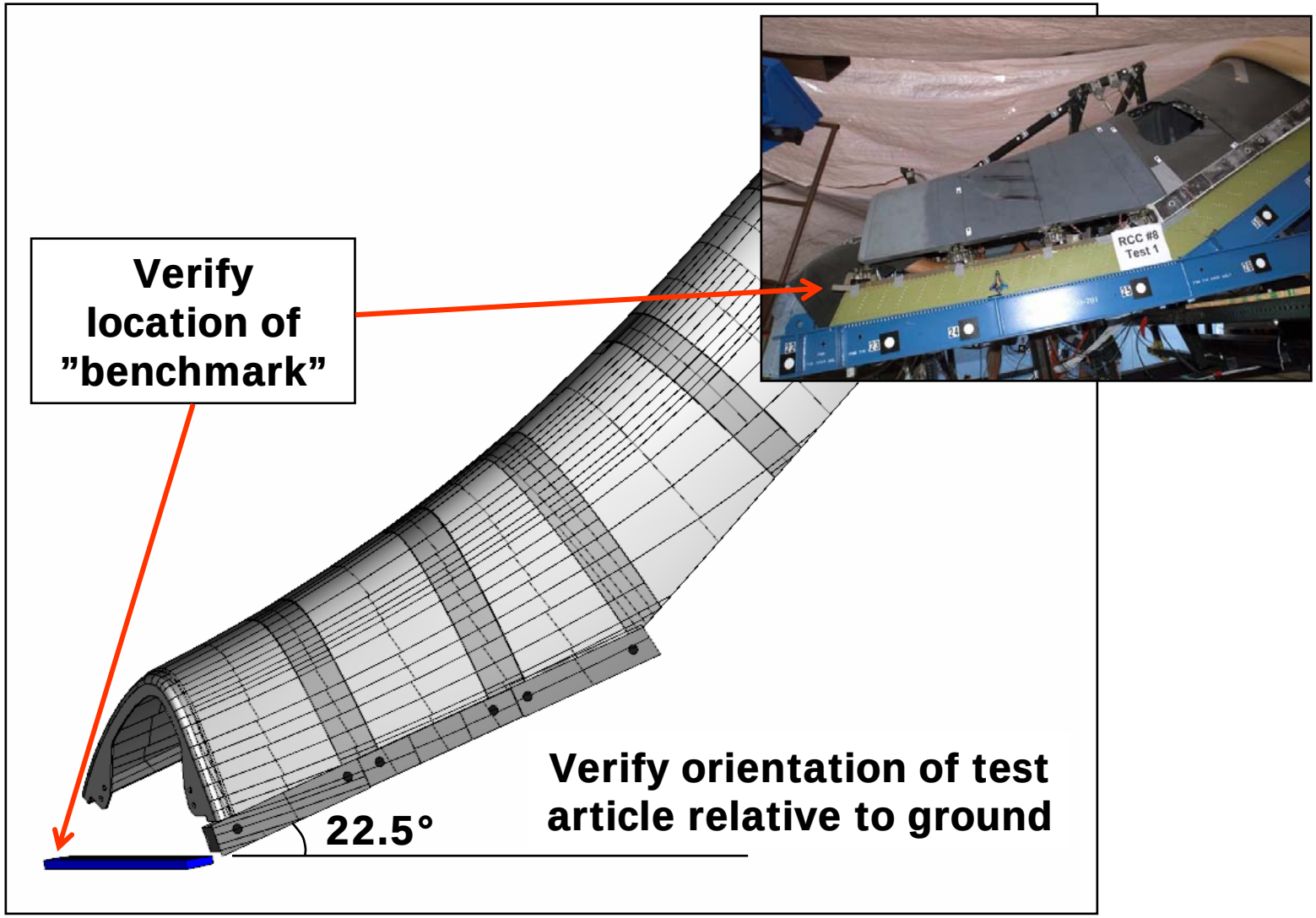

Procedure –Projectile Orientation

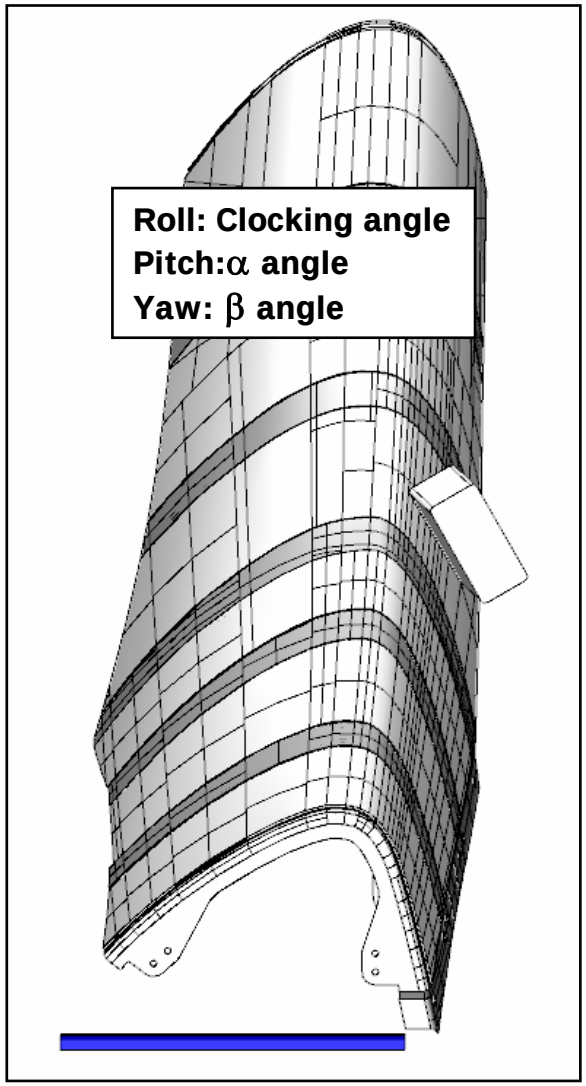

🡐 View of foam projectile relative to the LESS test article. Roll, Pitch & Yaw angles of the projectile are specified in the orbiter coordinate system which was correlated the test article in the previous step.

Projectile Orientation

Side view

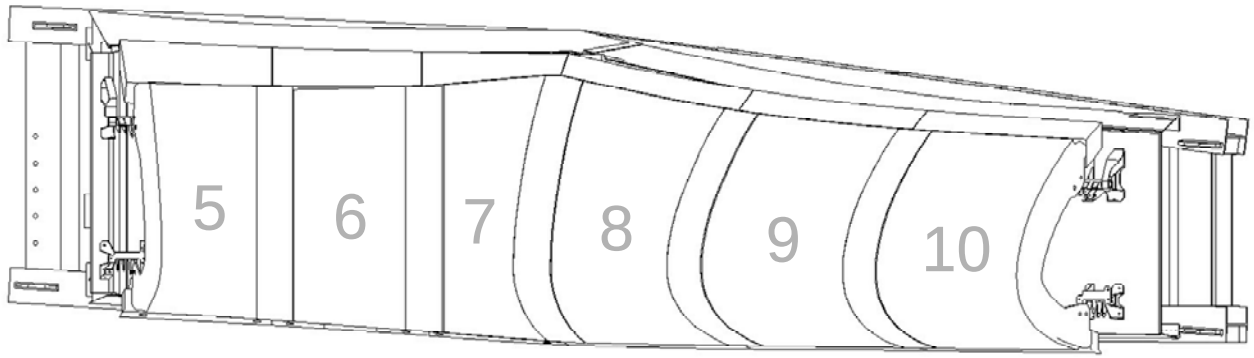

α=5.5°

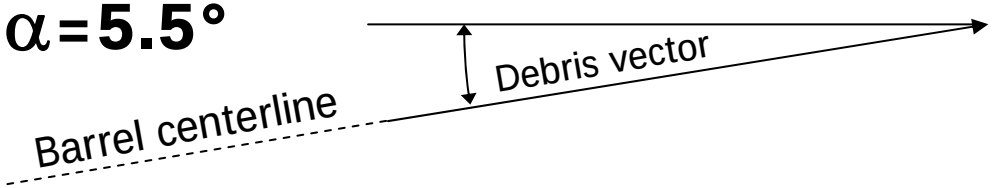

Top view

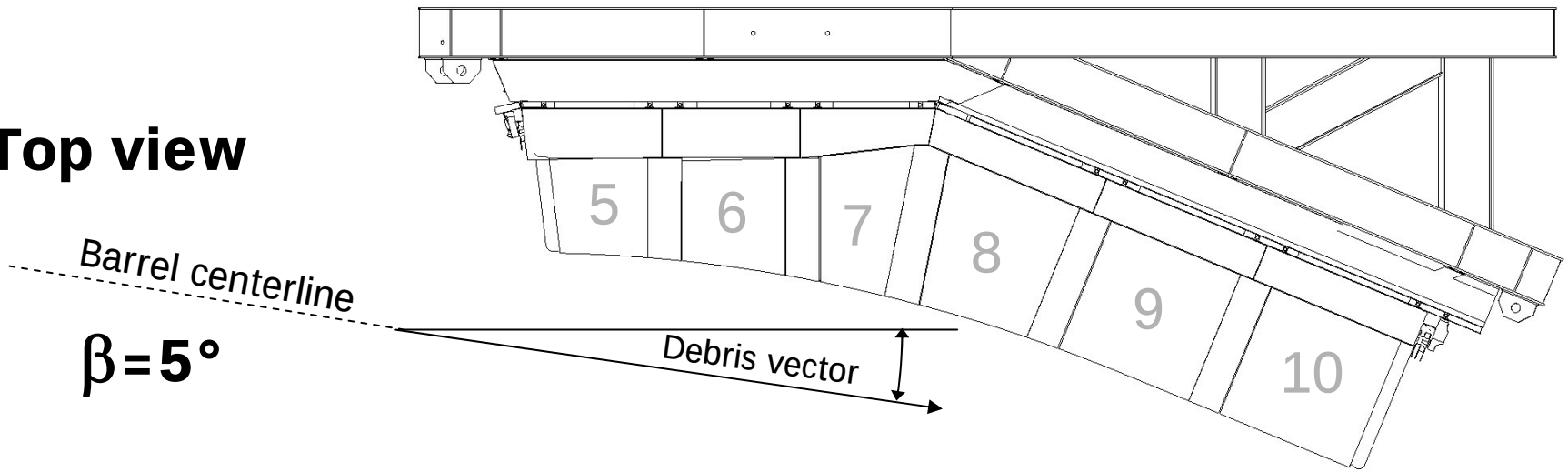

β=5°

Procedure – Aim Point #1

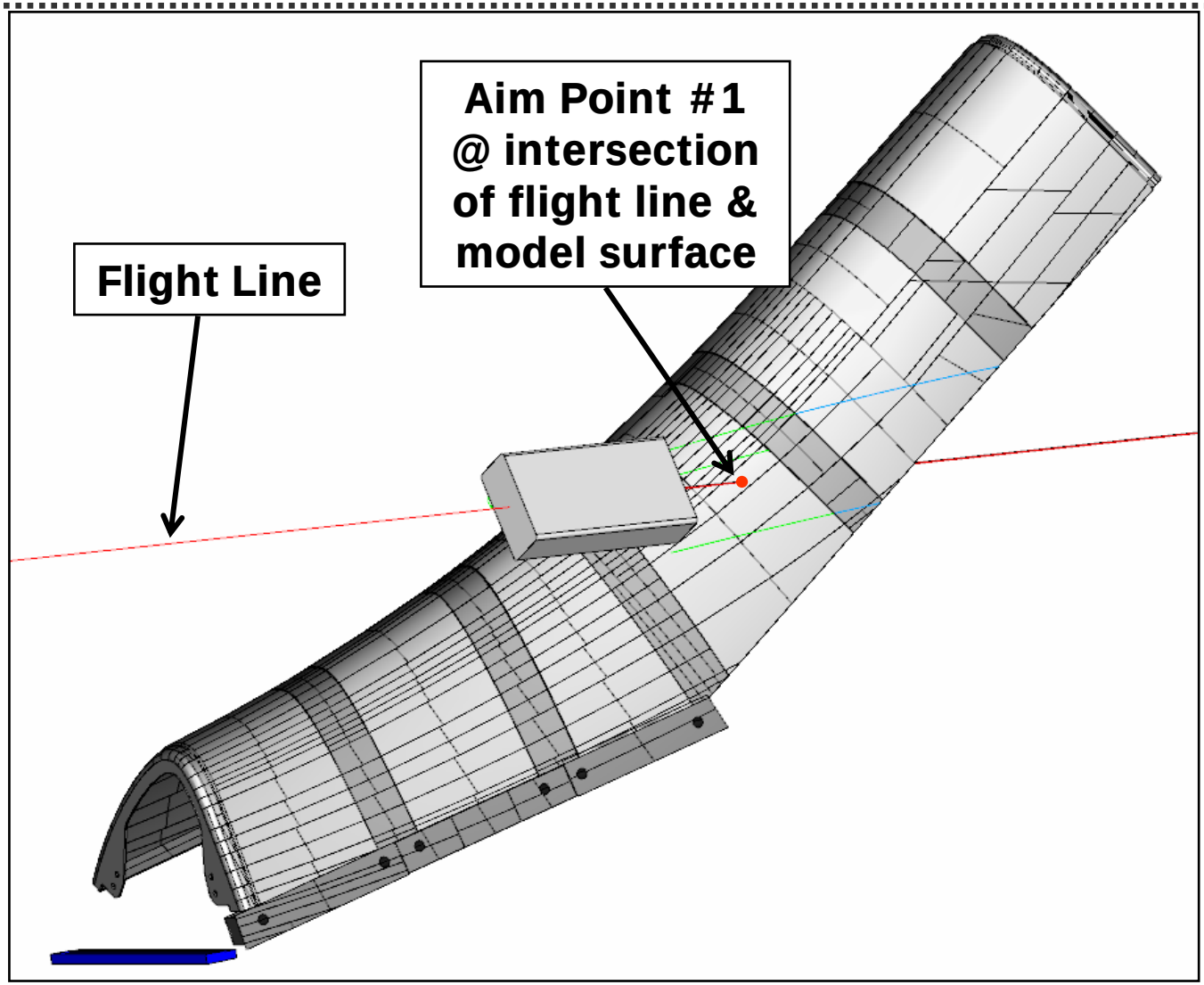

Procedure – Aim Point #2

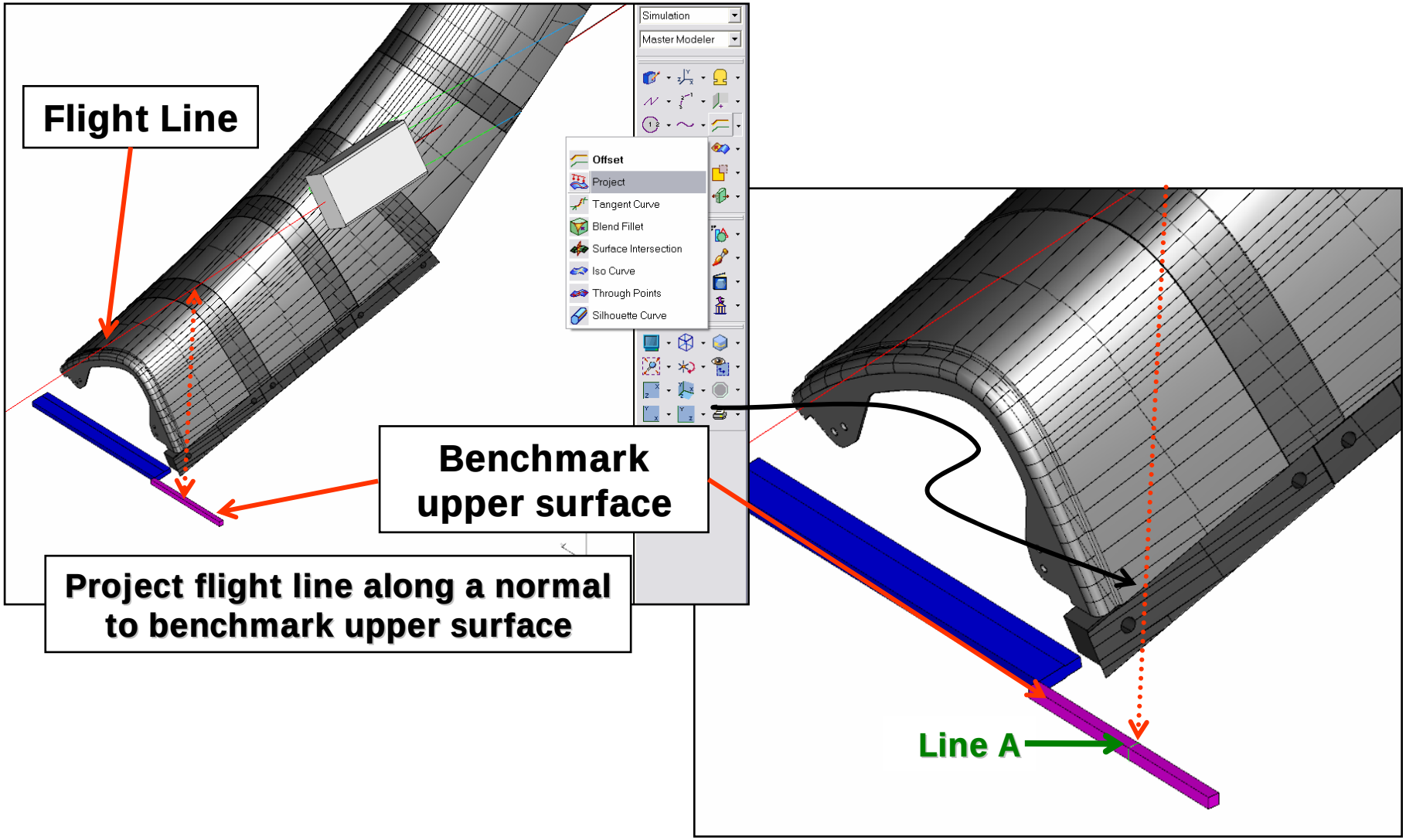

Procedure – Aim Point #2

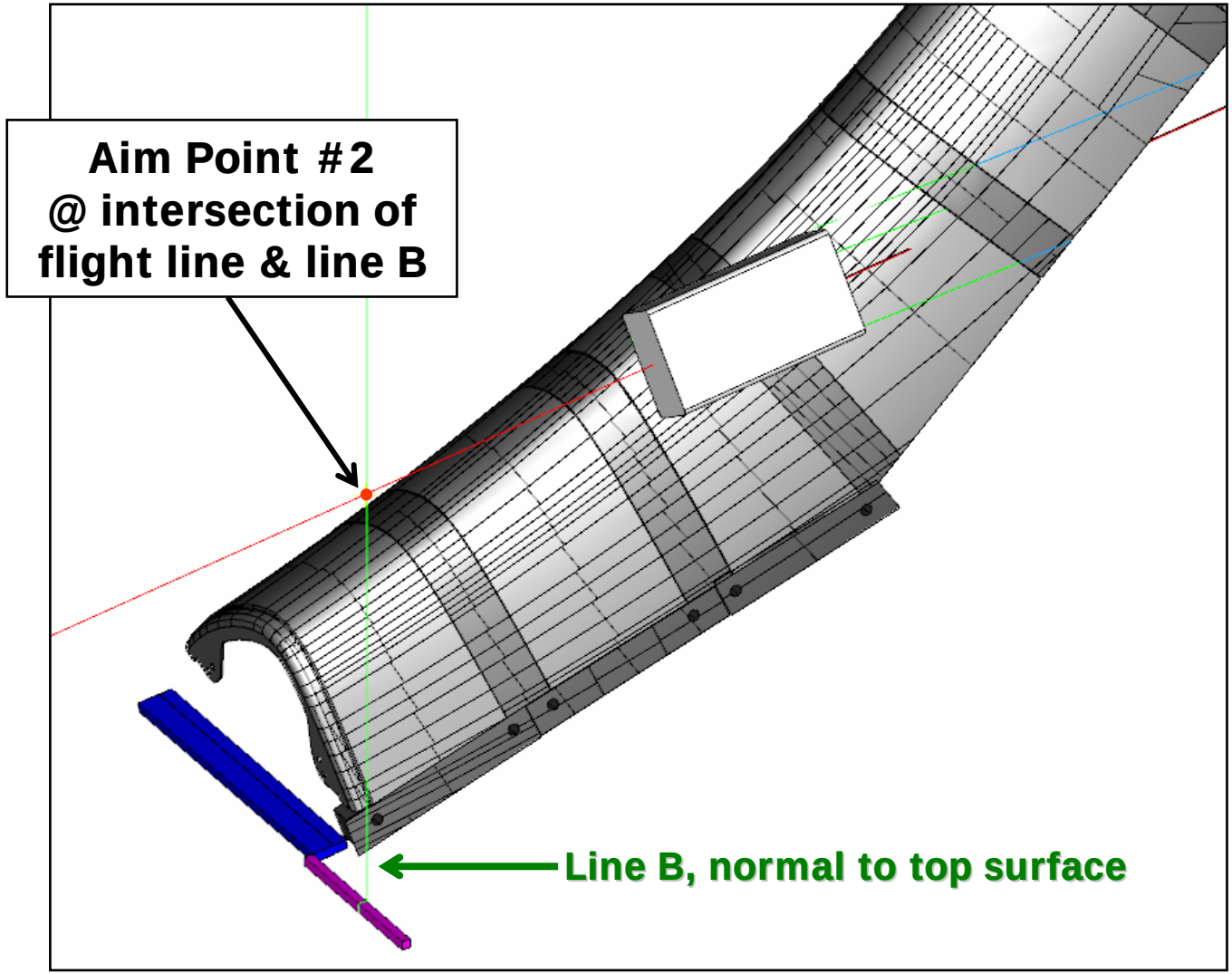

Full Scale RCC Tests: Aim Point Example

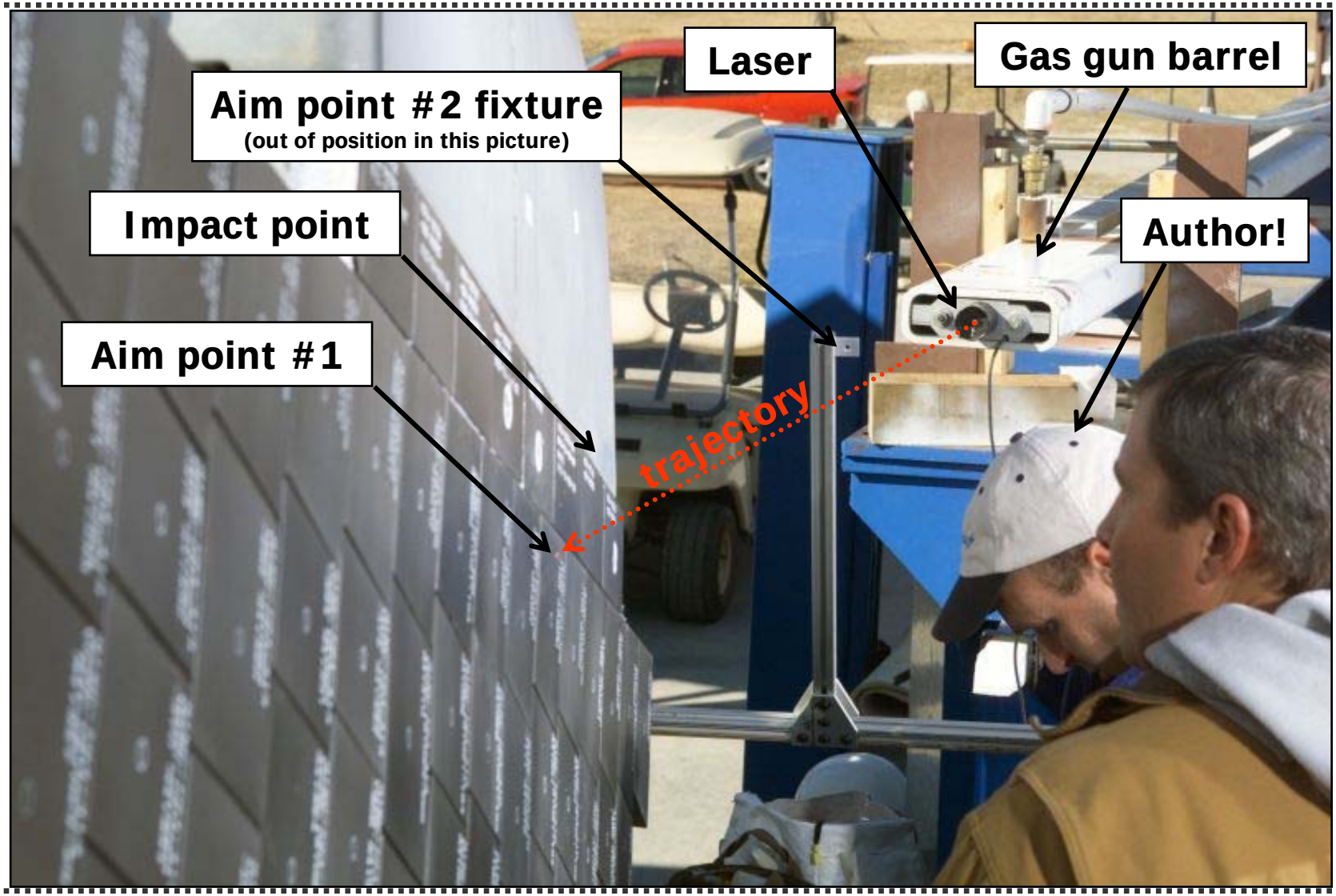

Panel 8L Test: Aim Point #1

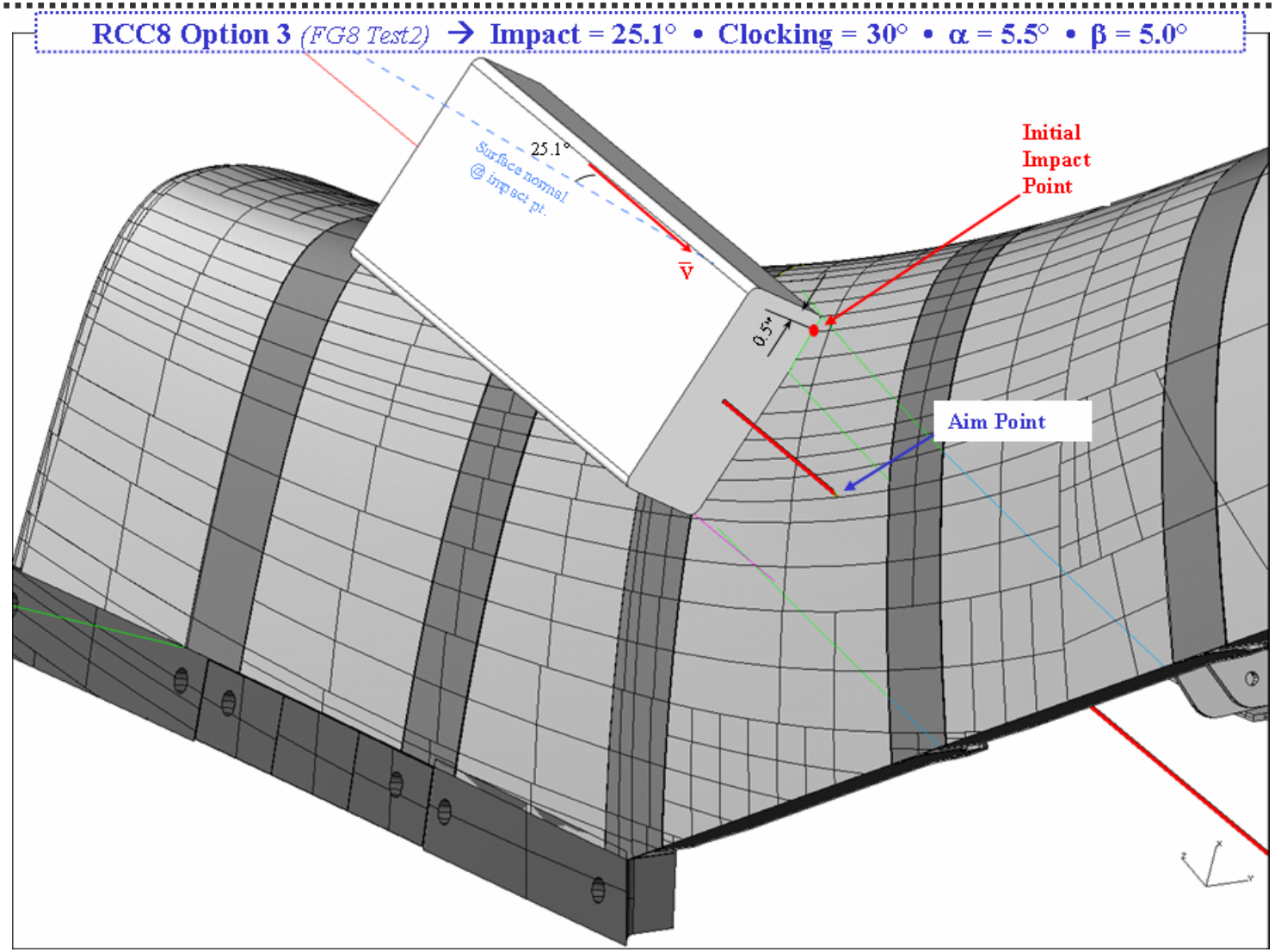

Panel 8L Test: Aim Point #2

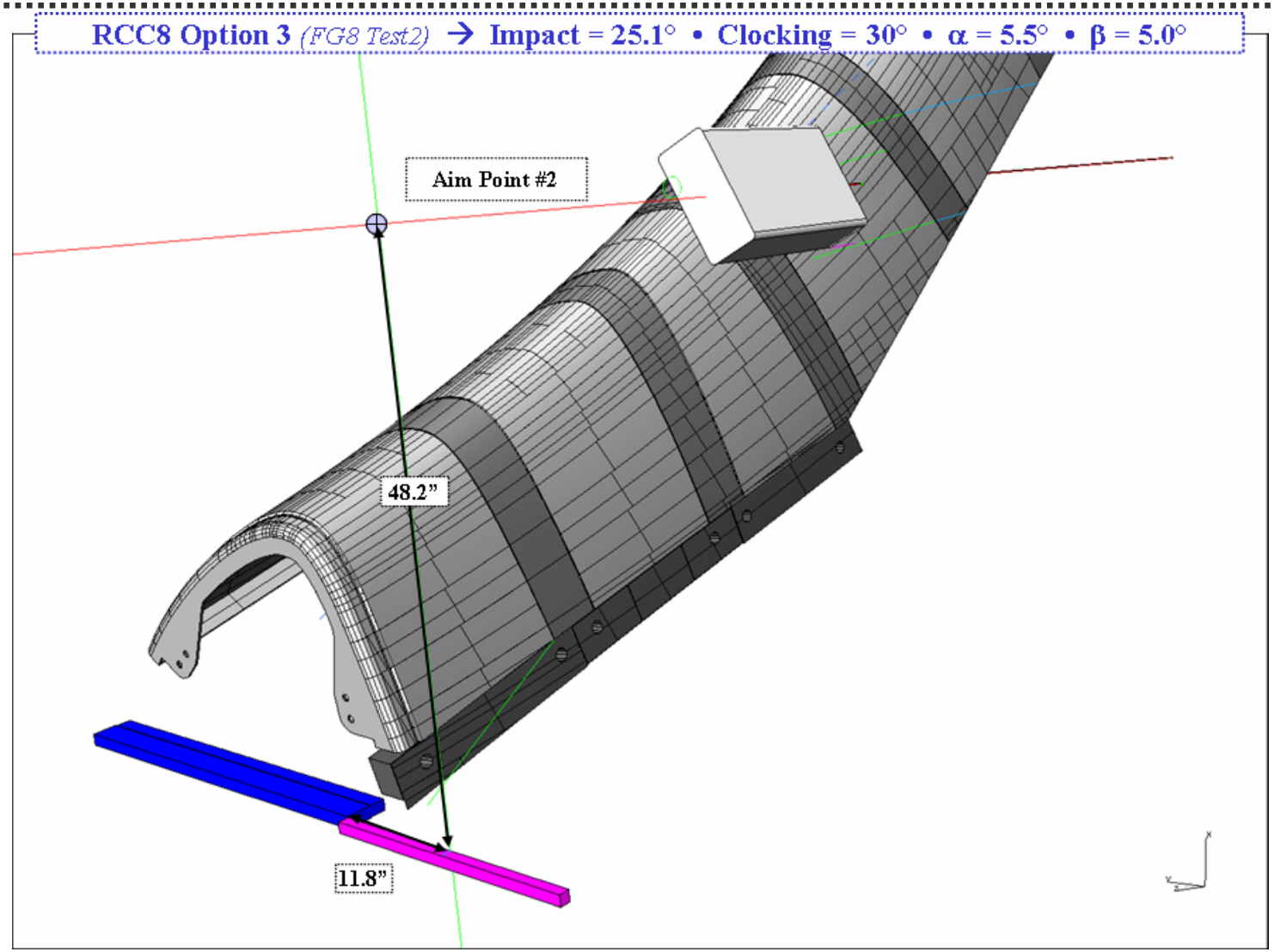

Panel 8L Test: Results

l01-rcc8-test1_chunk_1.mpg

Panel 8L Test: Results

before contact

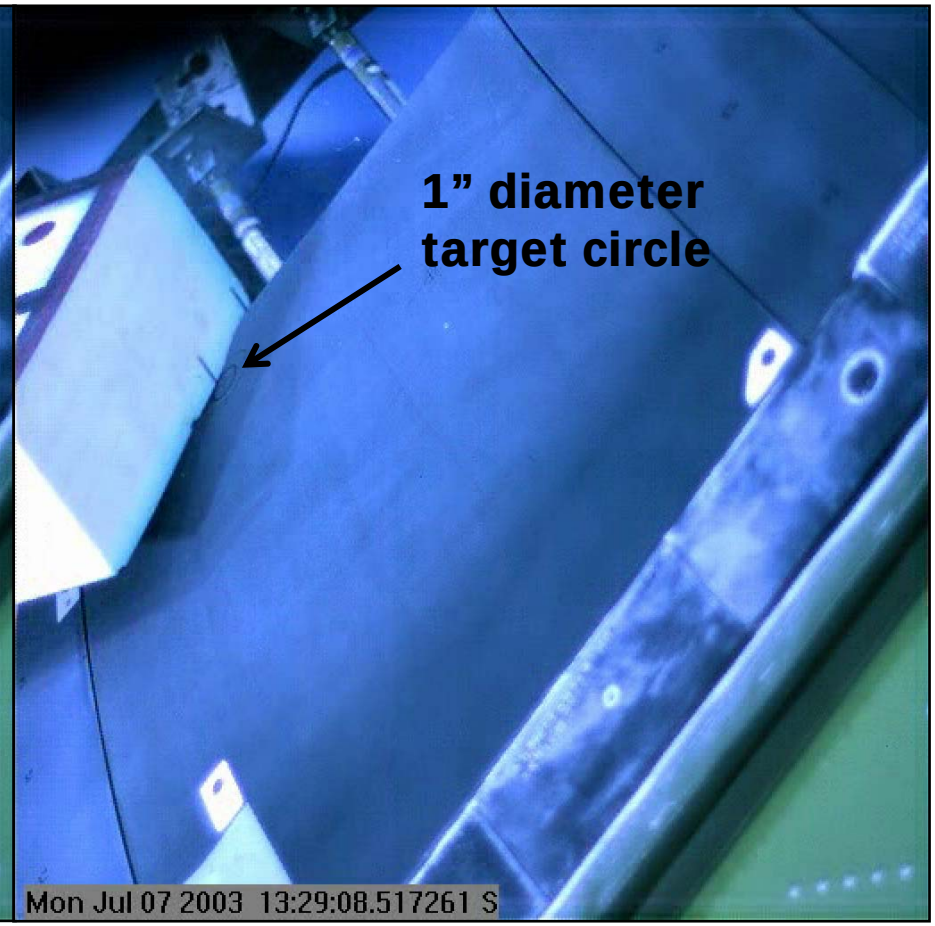

after contact (Δ_t= 125μs)

Panel 8L Test: Results

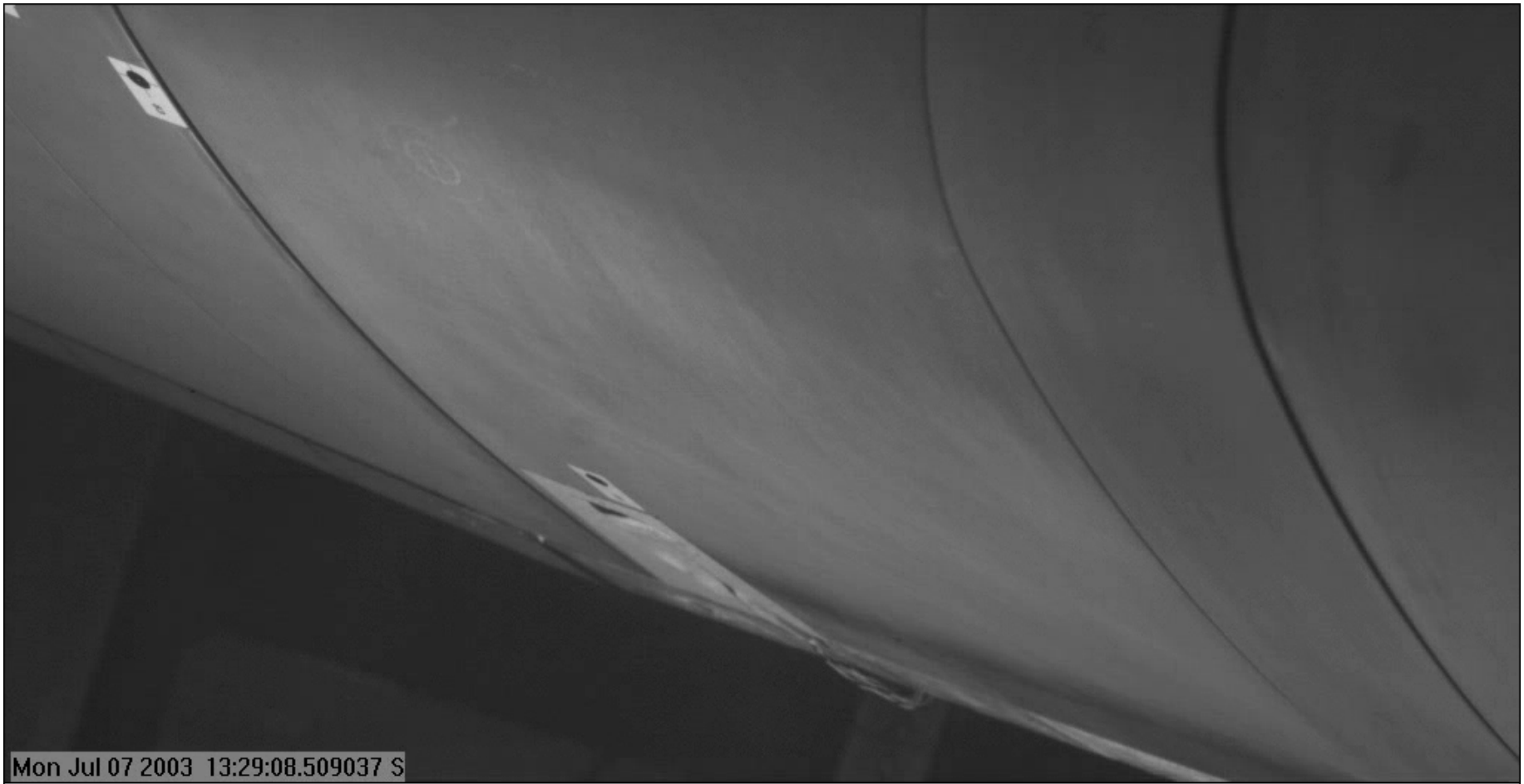

l06-rcc8-test1_chunk_1.mpg

Panel 8L Test: Results

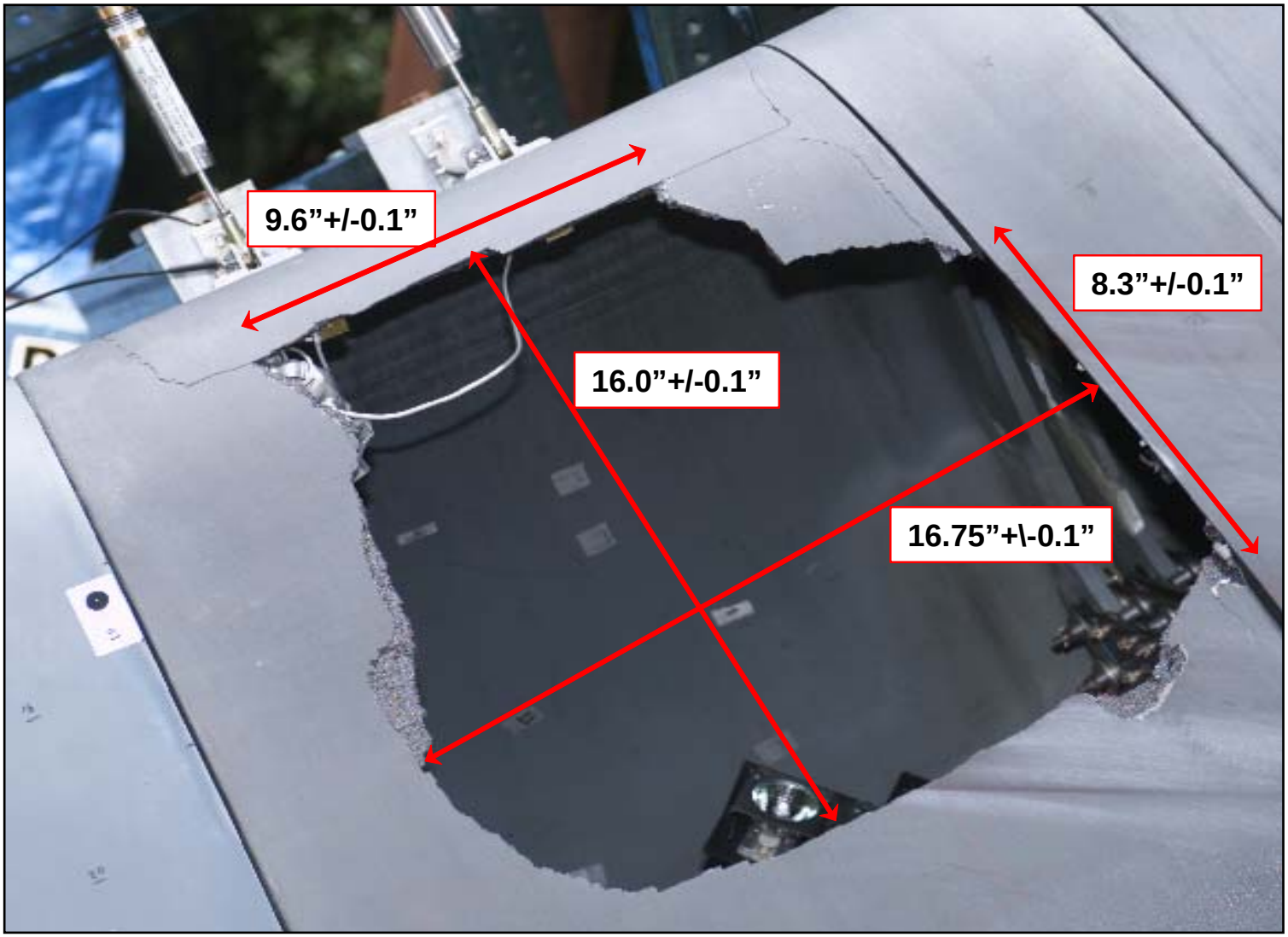

T-35 Test #1: General Layout

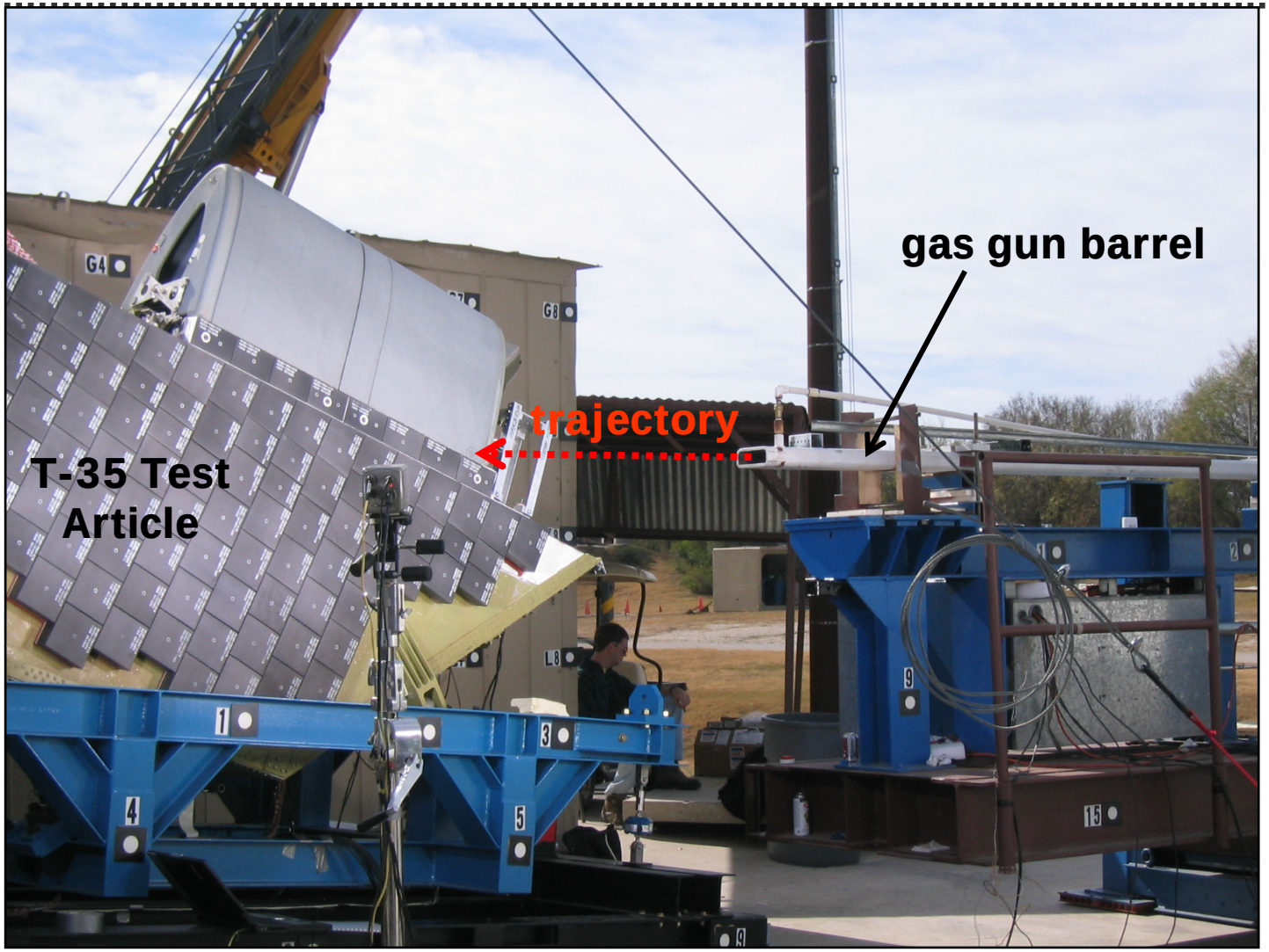

T-35 Test #1: Impact Point

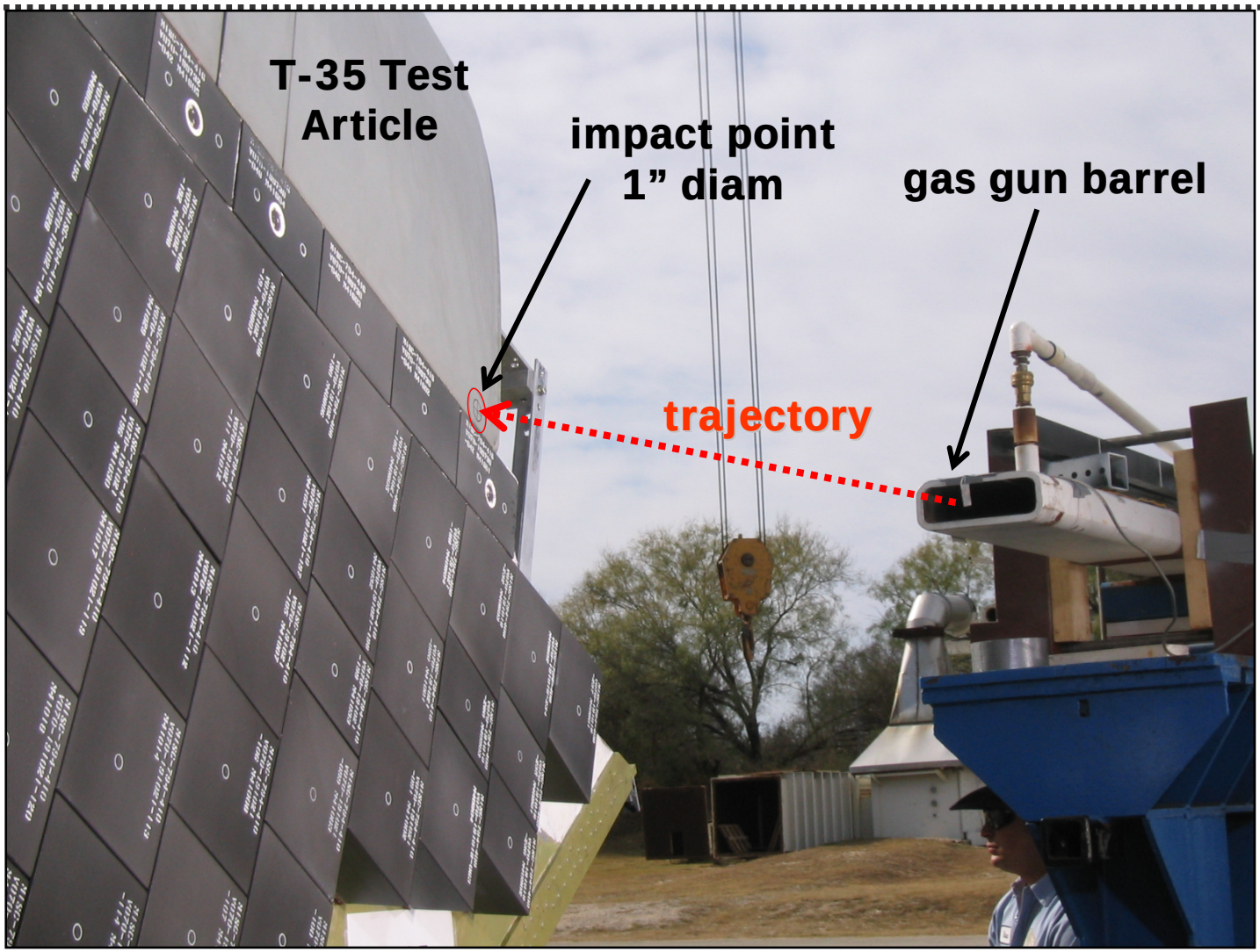

T-35 Test #1: Aim Point Fixture

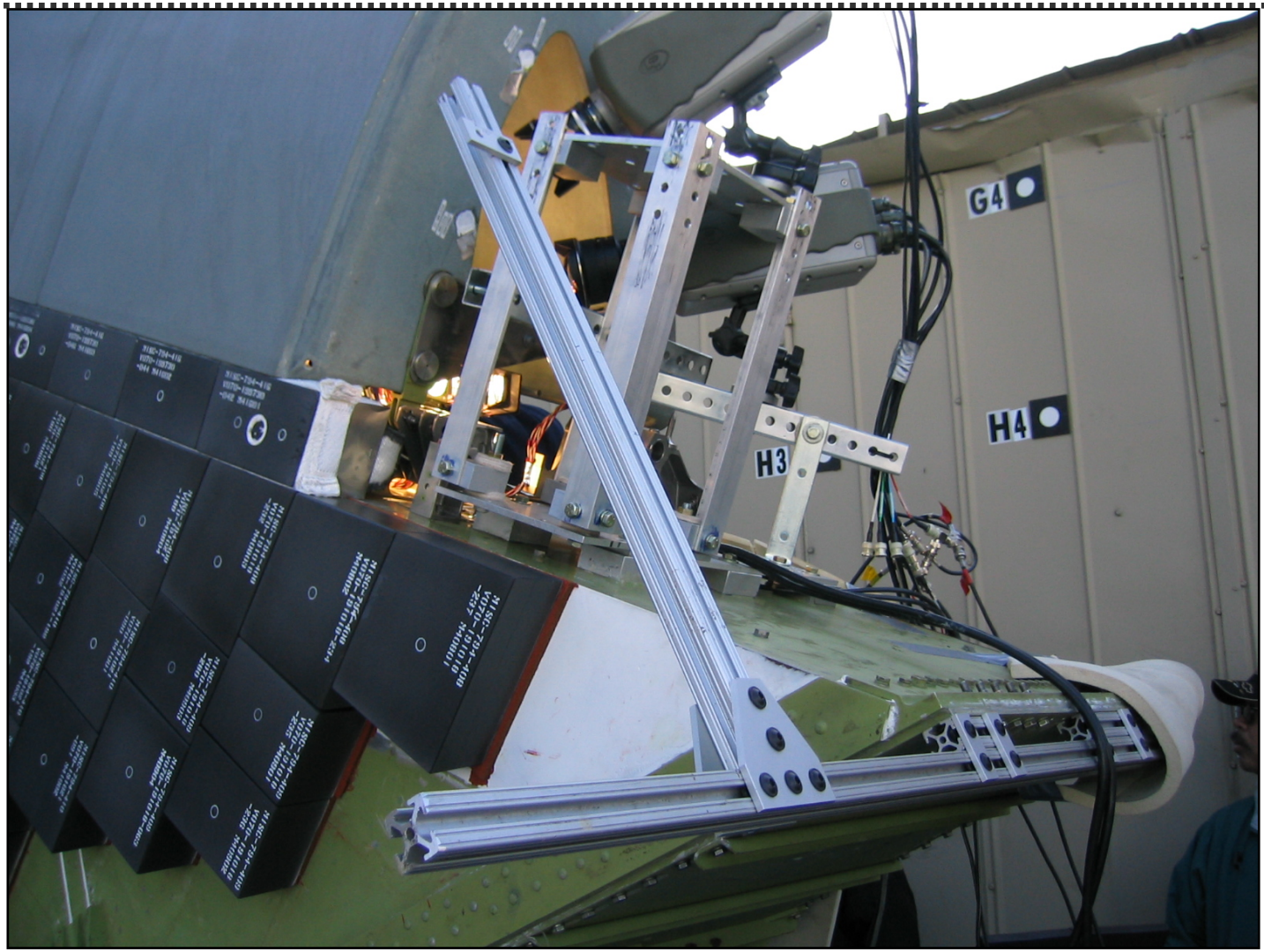

T-35 Test #1: I-deas Layout

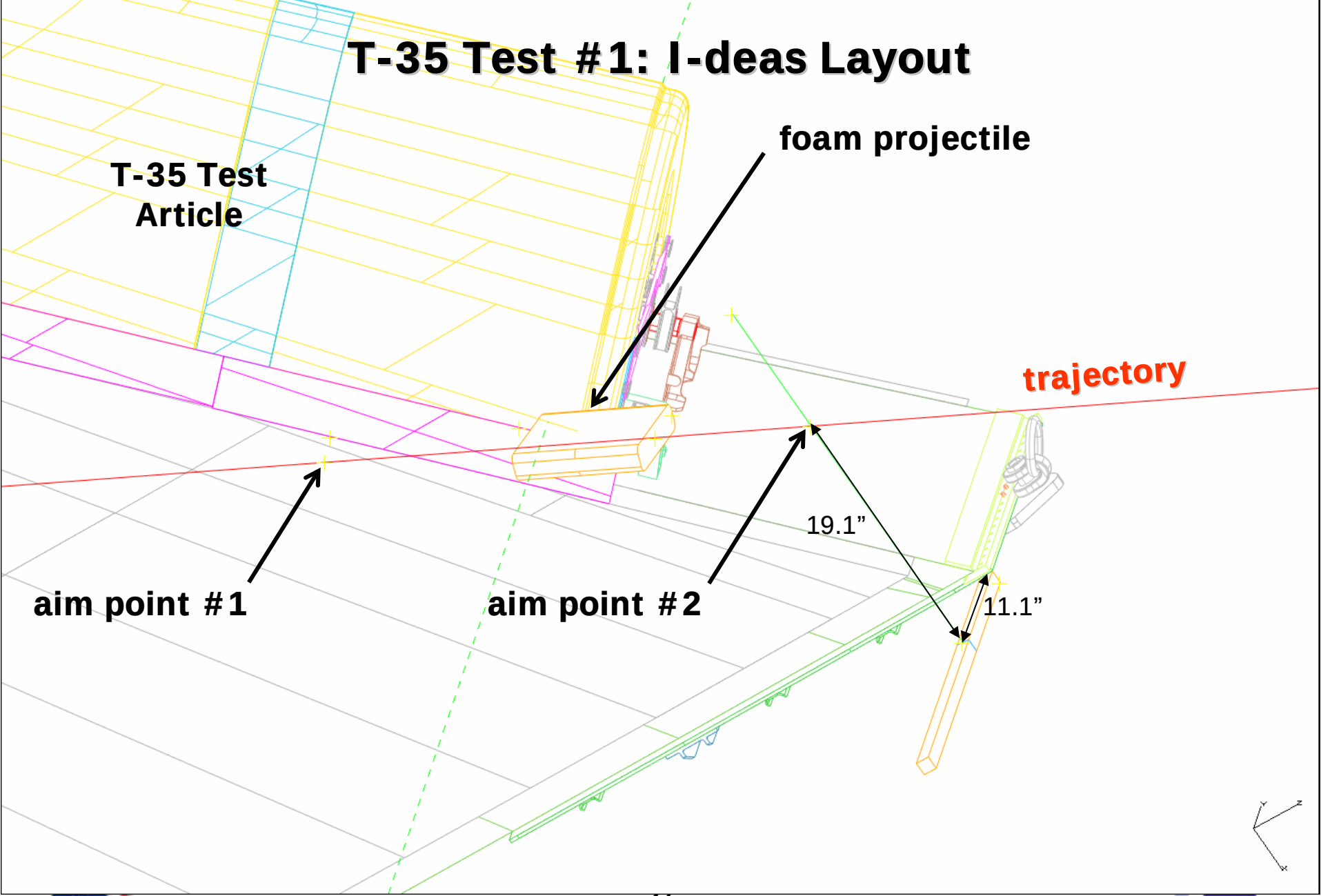

T-35 Test #1: I-deas Layout

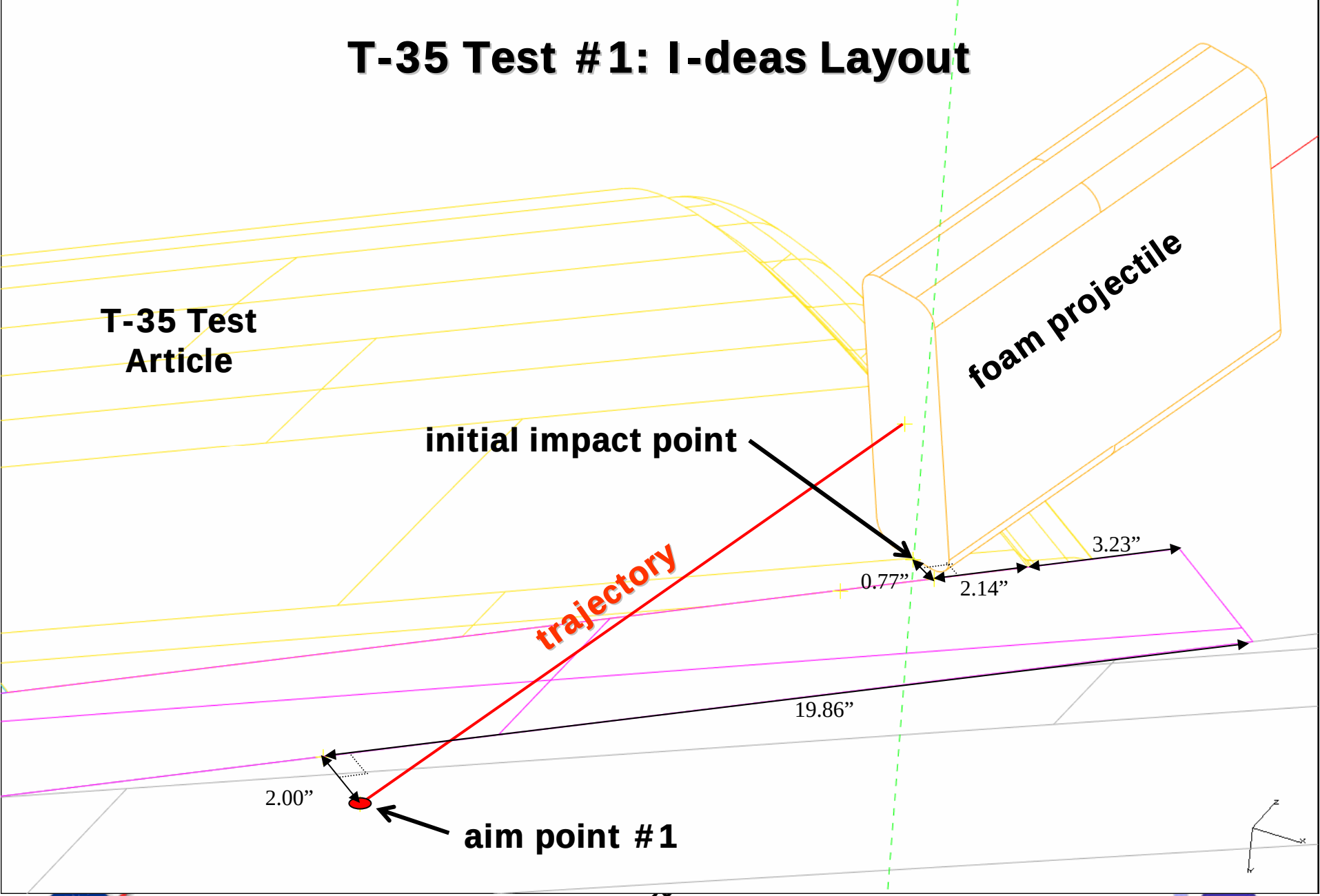

T-35 Test #1: Results

t35-rcc16-t1-l1_chunk_1.mpg

T-35 Test #1: Results

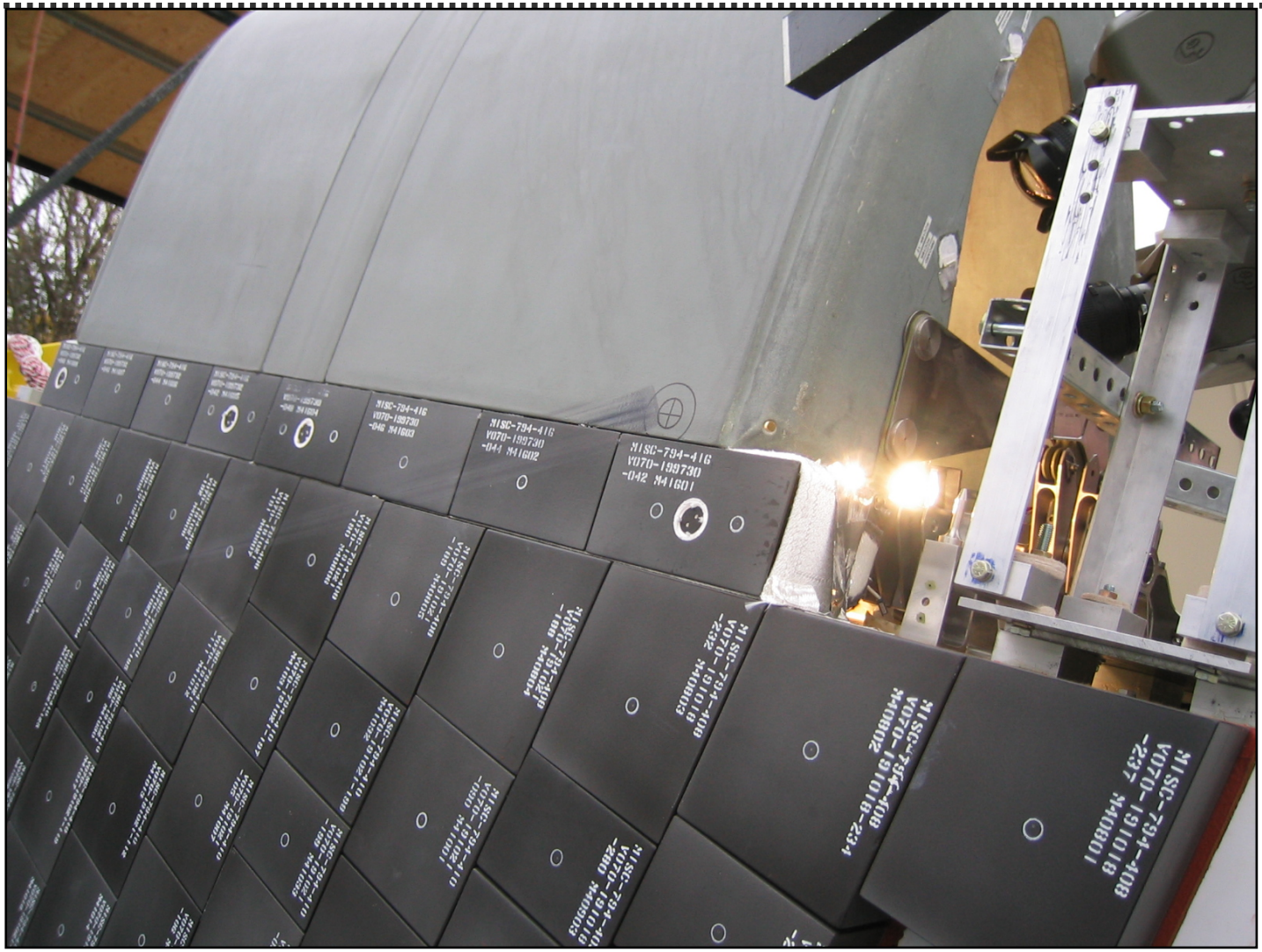

Summary

- A small number of full scale impact tests on the LESS article were conducted for the Columbia accident investigation. Numerous tests were conducted on other articles during the Return to Flight phase. There were no bad shots due to inaccurate trajectory points.
- Impact tests conducted February-July 2003 allowed the Columbia Accident Investigation Board and NASA to determine the direct cause of the Shuttle Columbia disaster.
- Test results were communicated to the Shuttle program and used in decision making for component redesign, element debris allowables and for the development of damage models.
- RCC panel response data (strains and accelerations) were delivered to the LS-DYNA team for use in their RCC modeling efforts.

Acknowledgements

- Dr. Justin Kerr / NASA-JSC: impact testing lead for NASA
- Dr. Eric Christiansen / NASA-JSC: supported HITF involvement
- Rob Harris / UGS: Application support
- Claude Bryant / Barrios ESCG: Valuable contributions to later aim points

Reference: Impact Testing Data Archive

http://hitf.jsc.nasa.gov/hitfpub/archive/home.cfm

Impact Test Archive - Microsoft Internet Explorer

File Edit View Favorites Tools Help

Address http://hitf.jsc.nasa.gov/hitfpub/archive/home.cfm

Orbiter TPS Impact Testing Data Archive

Index

Series 14	IPSS T-35 Tap Tests - RCC-16 and Wing Spar Tap Tests	7 Tests	Start: 04-Mar-04
Series 13	IPSS T-35 Foam Impact Test - Impact Penetration Sensor System Test	9 Tests	Start: 16-Feb-04
Series 12	Ice on tile - Ice impact testing at WSTF - Phase I	1 Tests	Start: 22-Jan-04
Series 11	IPSS KSC Test Program - This directory is for use in archiving files related to the IPSS test program conducted at the KSC test facility	1 Tests	Start: 12-Jan-04
Series 10	MLGD Special Configuration Foam Test - Foam impacts on MLGD Perimeter test article	10 Tests	Start: 12-Dec-03
Series 09	T-35 Special Configuration Foam Test - Foam tests on T-35 carrier panels	3 Tests	Start: 09-Dec-03
Series 08	Foam on Tile - Phase 1 - SwRI	25 Tests	Start: 10-Nov-03
Series 07	RCC Panel 9 - Return to Flight	3 Tests	Start: 28-Aug-03
Series 06	Fiberglass/RCC Panel 6 and 8 - ET foam impact testing	12 Tests	Start: 28-May-03
Series 05	Al plate - Facility checkout test using Al panel	12 Tests	Start: 07-Apr-03
Series 04	Tile and RCC Hypervelocity Impact Tests - Previously performed...	22 Tests	Start: 27-Mar-03
Series 03	Glenn Research Center Foam Impact Testing -	70 Tests	Start: 27-Mar-03
Series 02	MLGD - Main Landing Gear Door	5 Tests	Start: 19-Mar-03
Series 01	Initial Calibration - Proof of concept studies	8 Tests	Start: 19-Mar-03

Results

Web Log

File Browser

Planning Documents

System Admin Page

Responsible NASA Official: **Justin Kerr** — JSC Web Policy Notice

Curator: **Jim Hyde**

Help: **Internet Explorer 5.5+** with cookies and javascript **enabled** are needed to view this site.

Last Updated: 03/10/2004 09:40:42

http://www.jsc.nasa.gov/policies.html

Image overview - Microsoft Internet Explorer

Image overview - Series08\Images\Tests SwRI-TPS-p1.1.5-3\ (16)

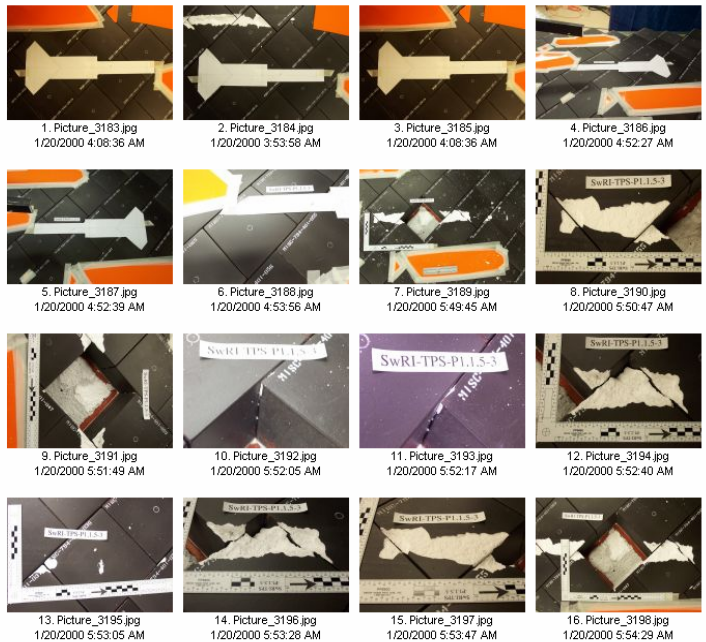

Reference: Columbia Accident Investigation Board Final Report

http://www.nasa.gov/columbia/caib/html/start.html

Hypervelocity Impact Technology Facility

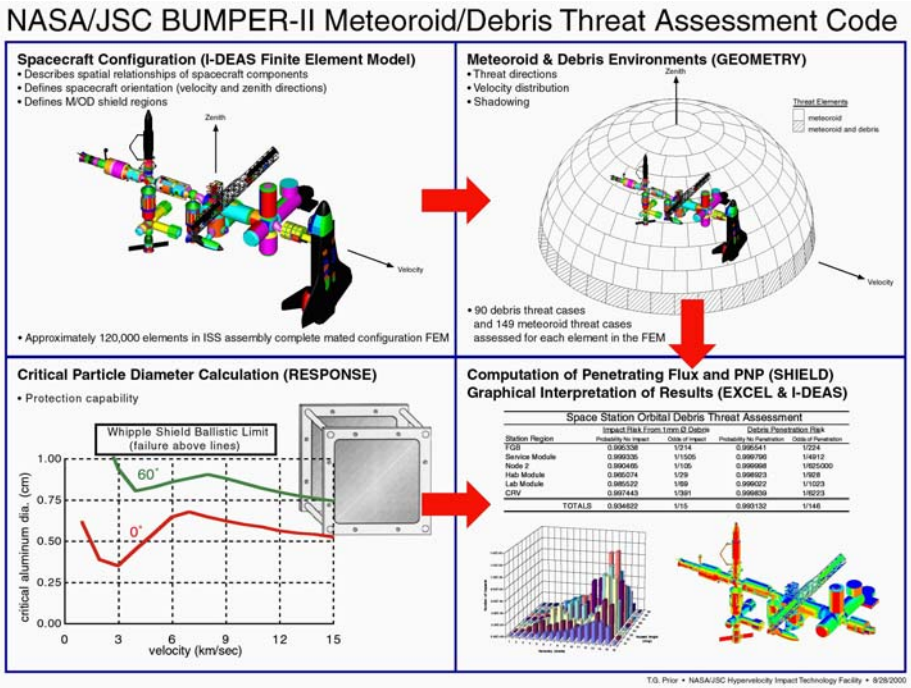

http://hitf.jsc.nasa.gov

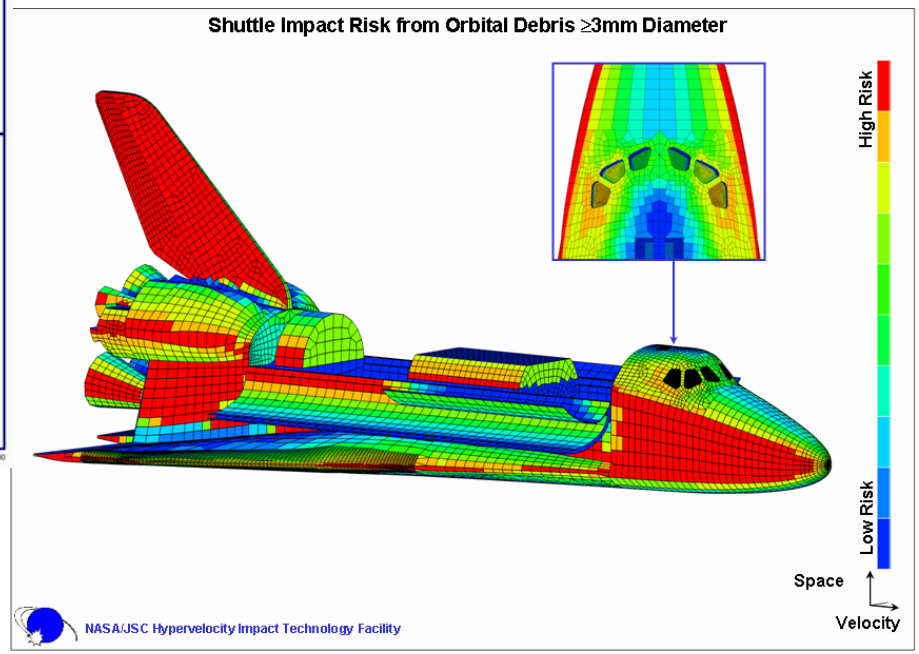

←JSC WSTF Two stage light-gas gun. Testing provides data to develop and verify ballistic limit equations used in BUMPER code

Two stage light-gas guns are used to accelerate projectiles to velocities up to 7 km/s