Aerospace Avionics Certification Using I-deas and NX Nastran

William Villers

Engineering Manager

Quartus Engineering

william.villers@quartus.com

(310) 321-6258

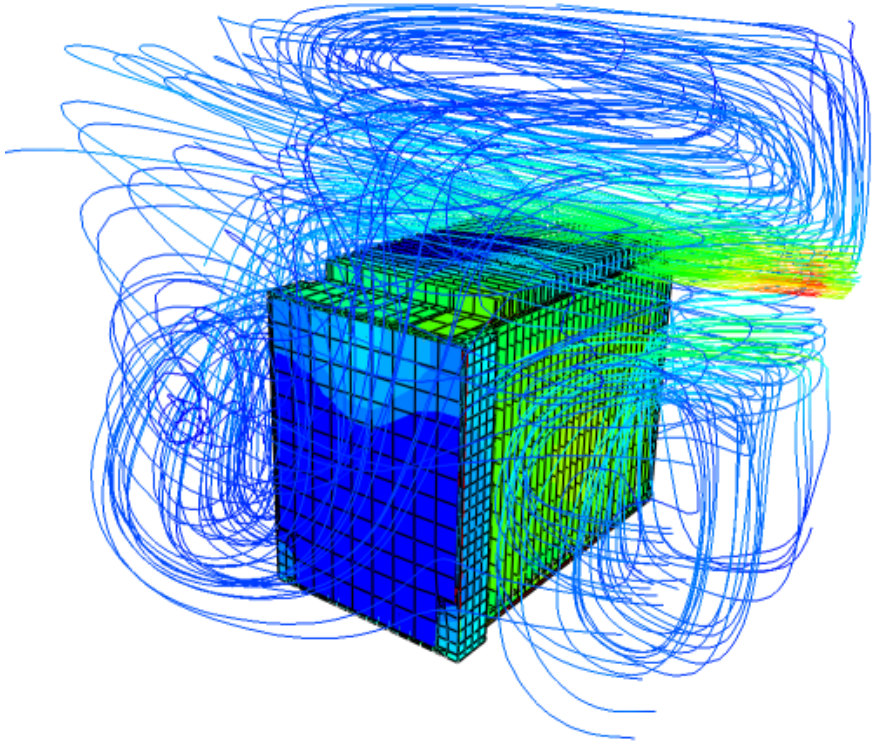

Premium Partners:

Who is Quartus Engineering?

- **Engineering Services**
  - Design, Analysis, Drafting
  - Test, Development
  - Training
- **Established in 1997**
  - 50+ Employees
  - Facilities in San Diego, CA and El Segundo, CA
- **http://www.quartus.com**

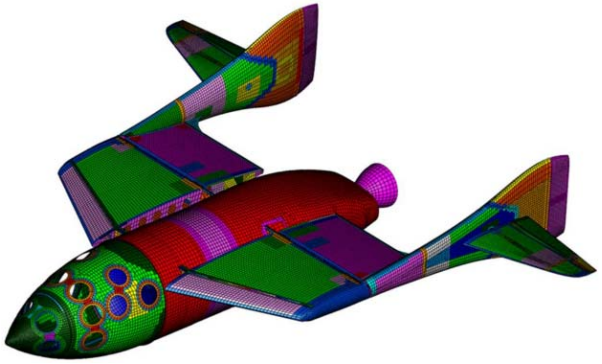

F-35 JSF ACE Radio Development

- **Northrop Grumman Radio Systems**
  - Provider of Integrated CNI Systems
  - Develops JSF ACE Radio System
- **Quartus Engineering**
  - Hired by NG as Analysis Support
    - Preliminary Analysis, PDR-level Design
    - Detailed Analysis, CDR-level Design
- **Lockheed Martin Aeronautics**
  - Prime Developer of F-35 JSF

ACE Survivability Requirements

- **Thermal Management**
  - Board & Component Temperatures
  - Heat Paths/Heat Dissipation Optimization
- **Dynamics Environment**
  - Shock Response
  - Sine Vibration
  - Random Vibration

- **Fatigue Life Estimates**

Two Models Generated from CAD

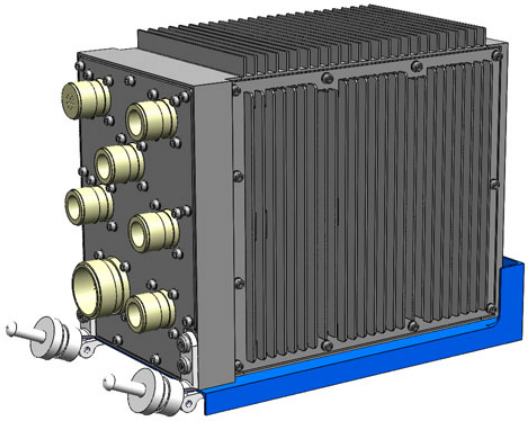

STEP Assembly

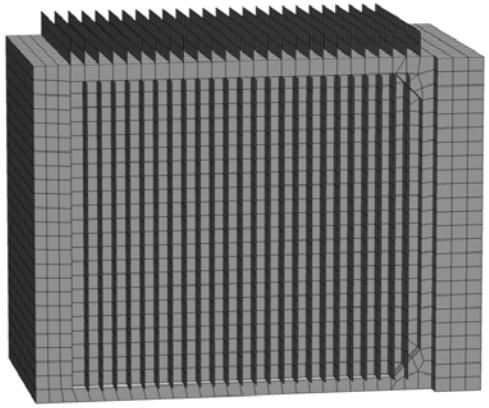

Thermal Model

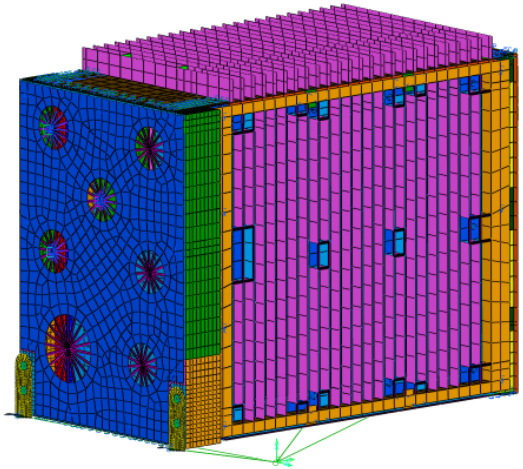

Structural Model

Thermal Analysis for JFS ACE Radio

- **System-Level Forced Convection Problem**
  - Steady-state coupled thermal/CFD
- **Requirement for detailed temperatures**
  - Aluminum Housing
  - Boards and Components
- **Cooling System Study**
  - Heat-sink geometry
  - Heat spreading

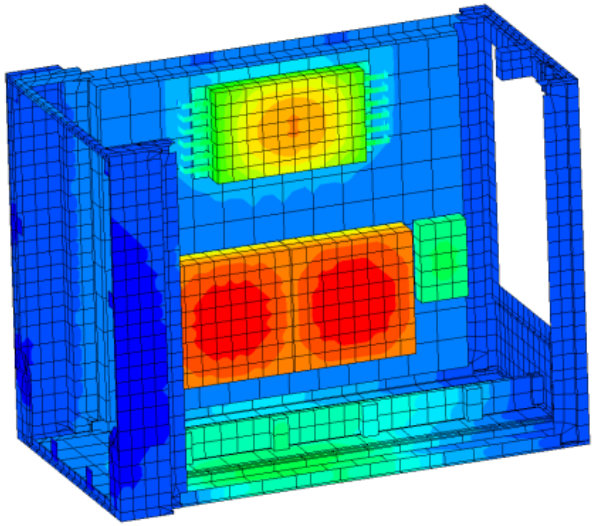

CFD Model Validation

- **Correlation with Test Data**
  - Modeling of the Test Conditions with ESC
  - Comparisons to Measured HTC

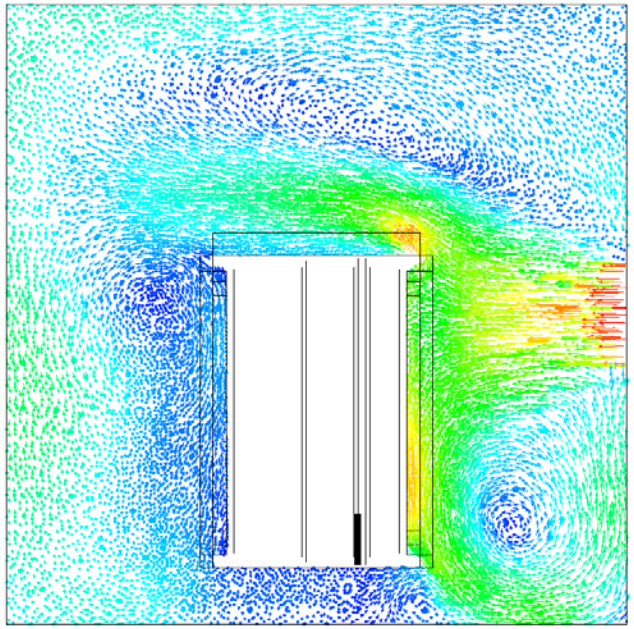

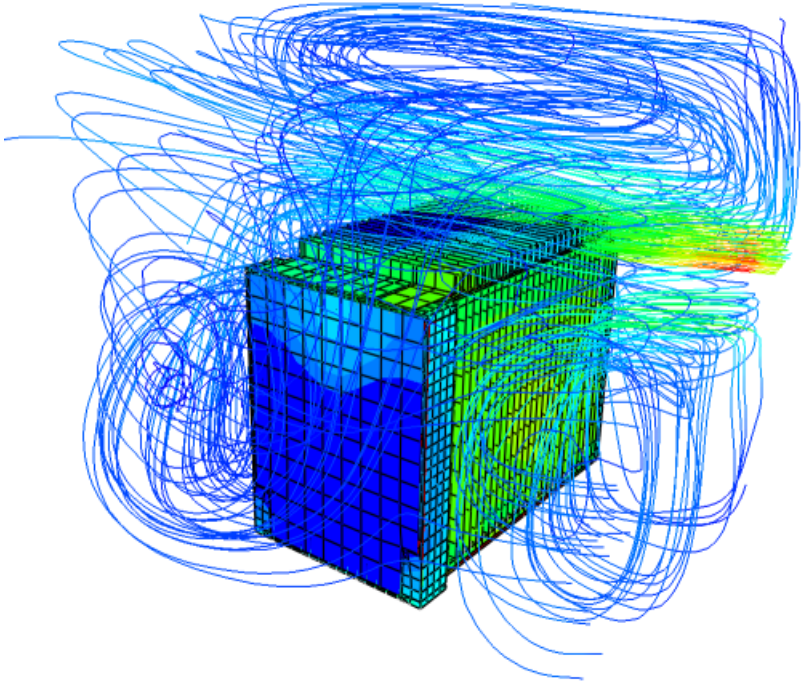

I-deas Electronic Systems Cooling

- **Thermal/CFD Model Creation Approach**
  - Assembly Meshing for Thermal Model
    - Thermal Couplings
    - Layered Shells
  - Manual Meshing of Fluid Domain

- **Utilization of ESC Advanced Parameters**
  - “Flagpole” Suppression
  - Non-aligned Flow Surfaces
  - Connect Disjoint Fluid Domains

Assembly Meshing for ESC

- **Assembly FEM from Product Structure**
  - Thermal Couplings Perfect for System Assembly
  - Preserves ESC Entities
  - Allows for Some Geometry Updates
  - Incremental model complexity

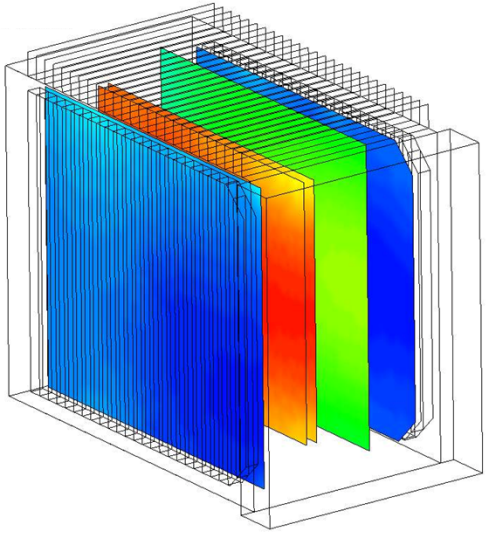

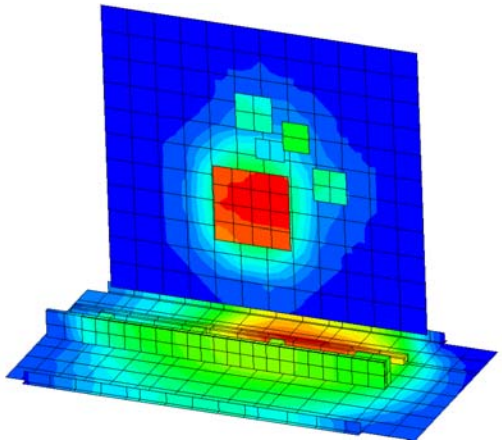

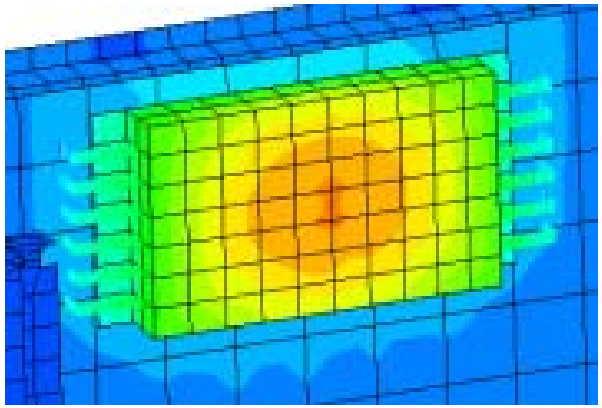

Thermal Model Generation

- **Multi-Layered Shells for PWB**
  - Fast Alternative to Solid Meshing of PWB
  - Accounts for through-thickness effects

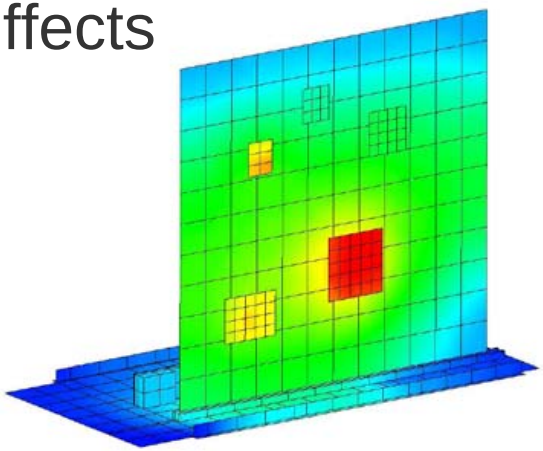

- **Thermal Couplings**
  - Most Chips Meshed as Shells
  - Bolt Connections
  - Brazed Joints, Thermal Paste

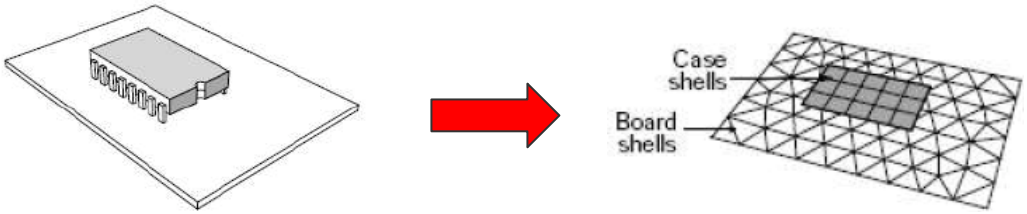

Number of Pins | Pin Cross Section Area | Pin Thermal conductivity

$$h_{eff} = \frac{N_{pin} \times A_{pin}}{A_{comp}} \cdot \frac{k_{pin}}{L_{pin}}$$

Component Cross Section Area | Length of Pins

ESC Fluid Domain Meshing

- **Bottoms-up Meshing**
  - Better Compliance with Thermal Mesh
  - Surface Coating, Extrude Shell Elements
- **Multiple Fluid Volumes**
  - Automatically Connected by ESC

ESC Advanced Parameters

- **“Flagpole” Suppression**
  - Explicit Modeling of chips and lead wires

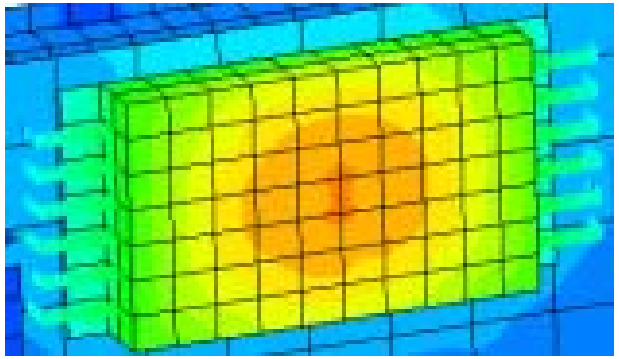

- **Non-Aligned Flow Surfaces**
  - Greater flexibility for fluid domain meshing
- **Connect Disjoint Fluid Domains**
  - Ensures continuity across fluid domains

Heat Sinks Parametric Study

- **Height, Spacing, Number, Thickness**
  - Geometry-based Model
    - Quick Update of Thermal Model

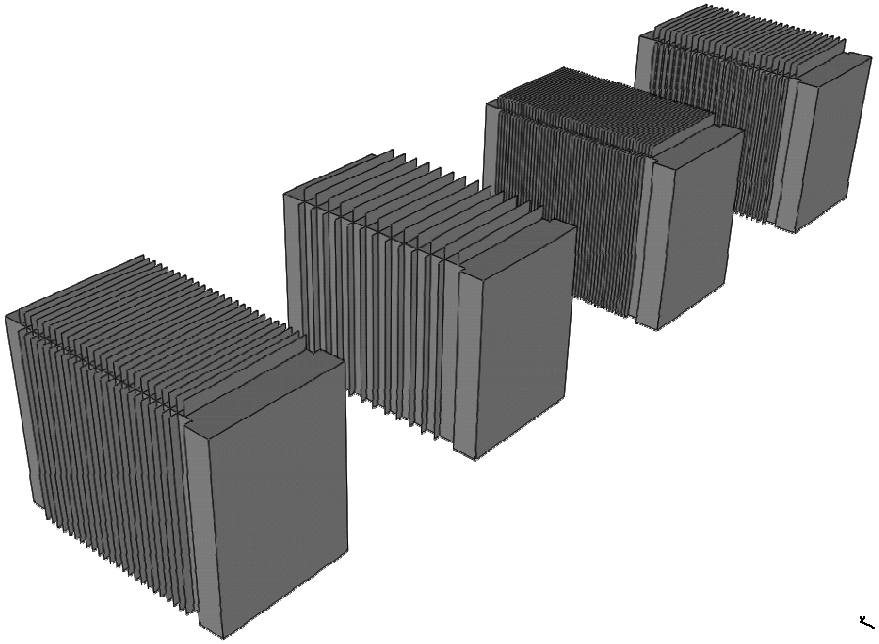

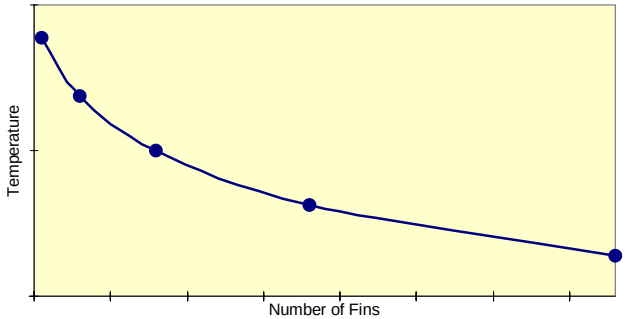

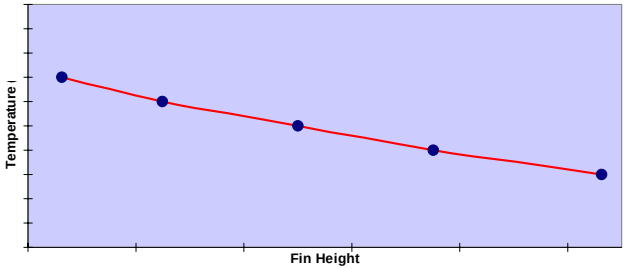

I-deas ESC Success

- **Allowed for incremental System Modeling**
  - Increased Complexity of Model
    - Enclosure CFD
    - General Thermal Analysis
    - Detailed Components Analysis

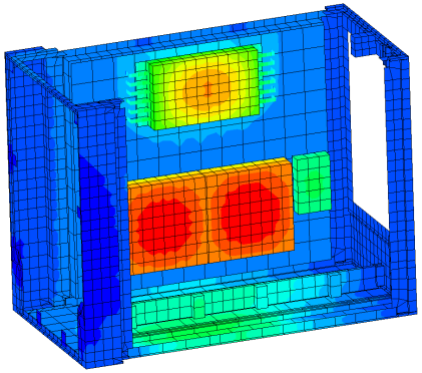

- **Allowed for Heat Dissipation Optimization**
  - Parametric Study of Heat Sinks
  - Quick Rearrangement of Components & Boards
  - Quick Modeling of Thermal Paste, …

ACE Structural Environment

- **System-Level Quasi-Static**
- **System-Level Dynamics**
  - Shock Response Spectrum
  - Sine Vibration
  - Random Vibration
  - “Sine on Random” Vibration
- **Subsystem Acoustic**

I-deas & NX Nastran Structural Analysis

- **Dynamics Model Creation Approach**
  - Assembly Meshing
    - Shells, beams, lump masses, solids
  - FEM Connectors

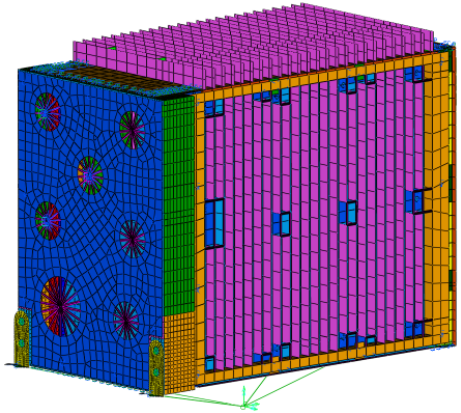

- **NX Nastran Task**
  - SOL101 for Quasi-static
  - SOL103+RA DMAP for Dynamics & Acoustic
- **Response Analysis**
  - RMS values calculations

Assembly FEM Generation

- **Assembly FEM Generated from STEP file**
  - Conservation of Product Structure
  - Quick Rearrangement of Components

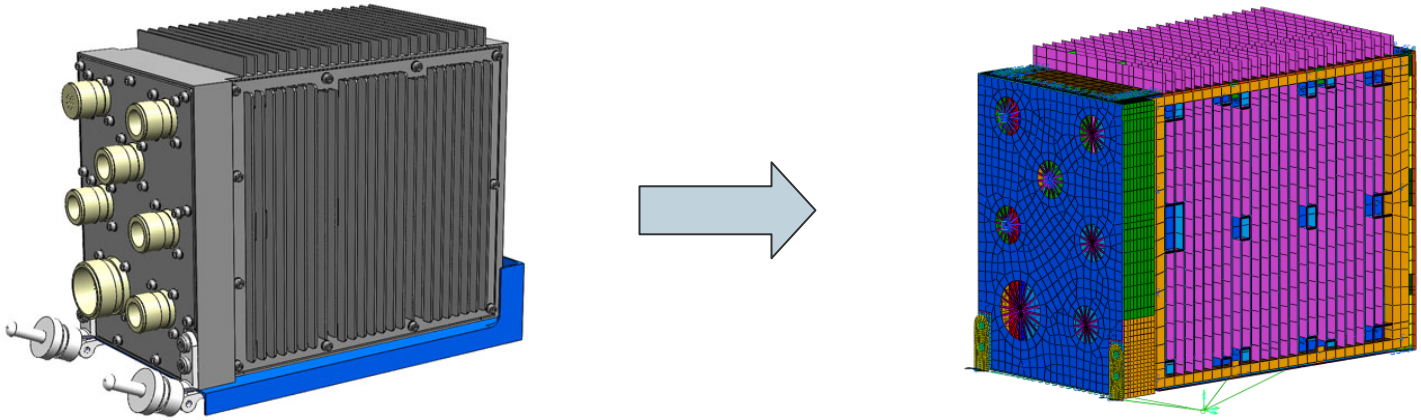

FEM Connectors

- **Modeling of Brazed Joints & Adhesive**
  - Single layer of brick elements
  - Automatic RBE connections

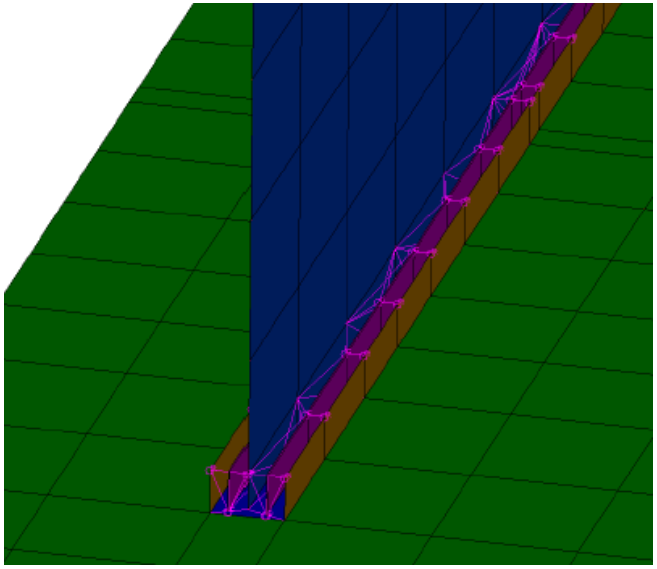

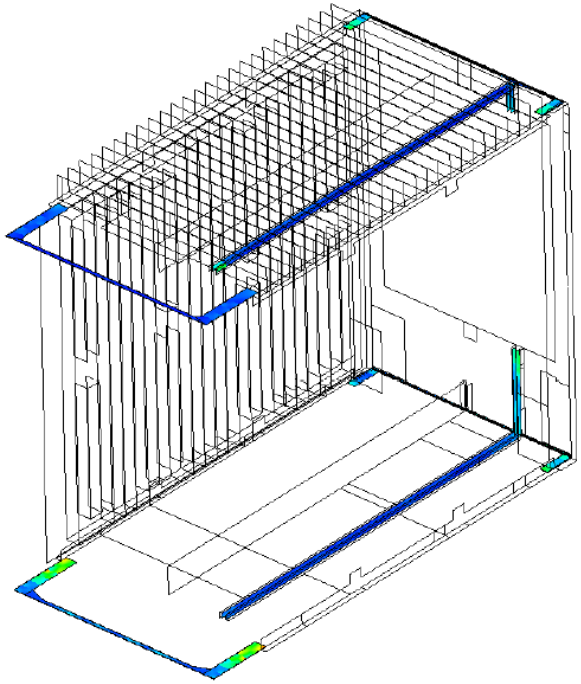

Response Analysis Approach

Finite Element Model

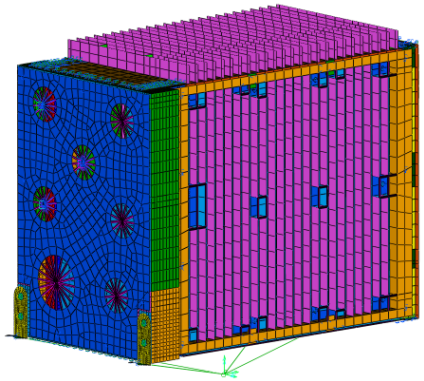

Nastran SOL103+DMAP

Normal Modes
Constraint Modes

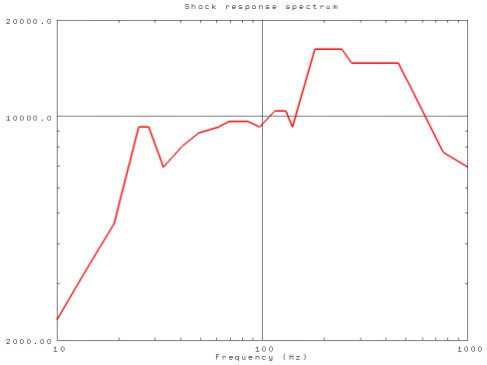

I-deas Response Analysis

Peaks Calculation

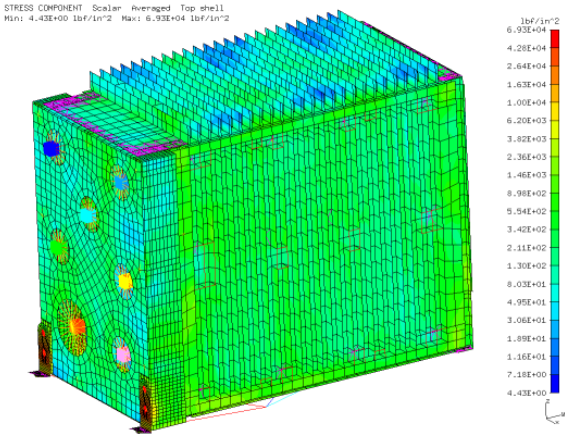

NX Nastran

- **I-deas NX Nastran Task to Generate Deck**
  - Supported 100% transfer
  - MAYA RA DMAP for constrained modes
- **AUTOMPC,YES was used extensively**
  - Alleviates FEM Connectors MPC clashes
- **64-bit, NX Nastran DMP**
  - Allowed faster solves on 4-way server

I-deas Response Analysis

- **Modeling of Dynamics Environment**
  - Acceleration PSD, SRS, “Sine on Vibe”
  - Equivalent PSD of Acoustic Environment

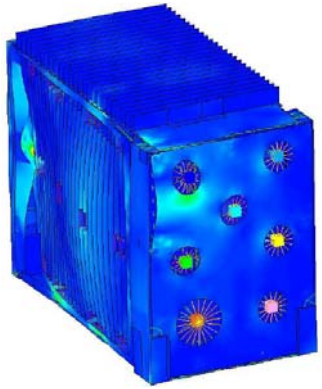

- **Calculation of RMS Results**
  - 1-σ stresses and displacements
  - Number of zero-crossings

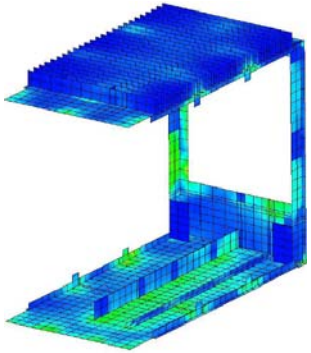

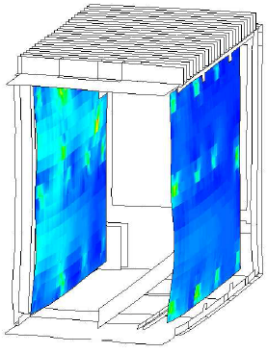

Lessons Learned: FEM Creation

- **Assembly FEM Very Successful**
  - Allowed for quick component rearrangement
  - AFEM remained associative from PDR to CDR
    - Incremental model complexity increase
- **Extra model verification with Femap**
  - Shell offsets
    and thicknesses

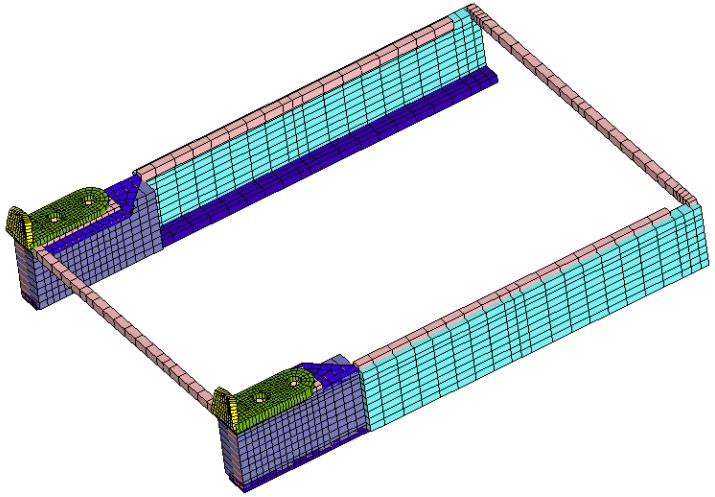

Lessons Learned: Response Analysis

- **Response Analysis faired fairly well**
  - Somewhat slow, very I/O intensive
  - Doesn't "read" Nastran Mass Participation
    - MEFFMASS output in f06
  - Equivalent Transient <u>not</u> necessarily conservative
    - We always use direct PSD
  - Post-processing much easier than Nastran
    - I-deas Visualizer vs. f06 XYPEAK
  - No "Sine on Vibe" Functionality

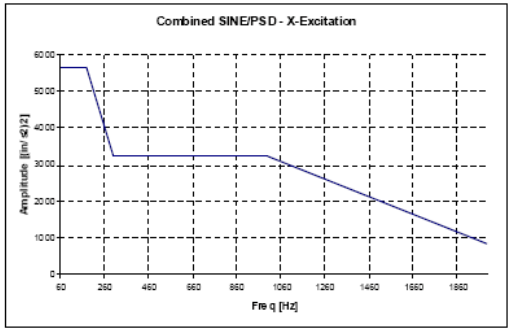

Conclusions

- **Assembly FEM Quite Successful**
  - Allowed PDR to CDR Model Updates
  - Works better with Structural Models than ESC
    - Assembly Update clashes with ESC entities
- **ESC Perfectly Suited for Avionics Thermal**
  - DMP-enabled ESC would be very good
- **Response Analysis Very Useful**
  - Handled every aspect of Dynamics Requirements
    - Direct “Sine on Random” would be a nice addition

Acknowledgments

- **Northrop Grumman Radio Systems**
  - Joe Camaratta
    Manager Electromechanical Systems
  - Mike McLane
    ACE Program Manager
  - Marc Lopez
    ACE Design Lead
- **Maya Heat Transfer Technology**
  - Kevin Duffy
    President