How to Configure and Use Routing Electrical

Mark Whitwell
GTAC
Mark.Whitwell@ugs.com
1-800-955-0000

© UGS Corp. 2005. All rights reserved.

Terminology used in Routing Electrical

- Paths
- Bundle
- Overstock/Dressing
- .ptb file (Part Table file)
- .plv file (Part Library View file)
- Connection List
- Component List
- Routing Administrator

© UGS Corp. 2005. All rights reserved.

Routing Administrators

- Routing Administrators must understand their company's requirements.
- How to properly configure Routing Electrical within the operating system.
- Building companies standard parts library and preparing them for use in Routing.
- Configuring design rules before or after Routing Electrical is in production.

© UGS Corp. 2005. All rights reserved.

A Large Harness Image

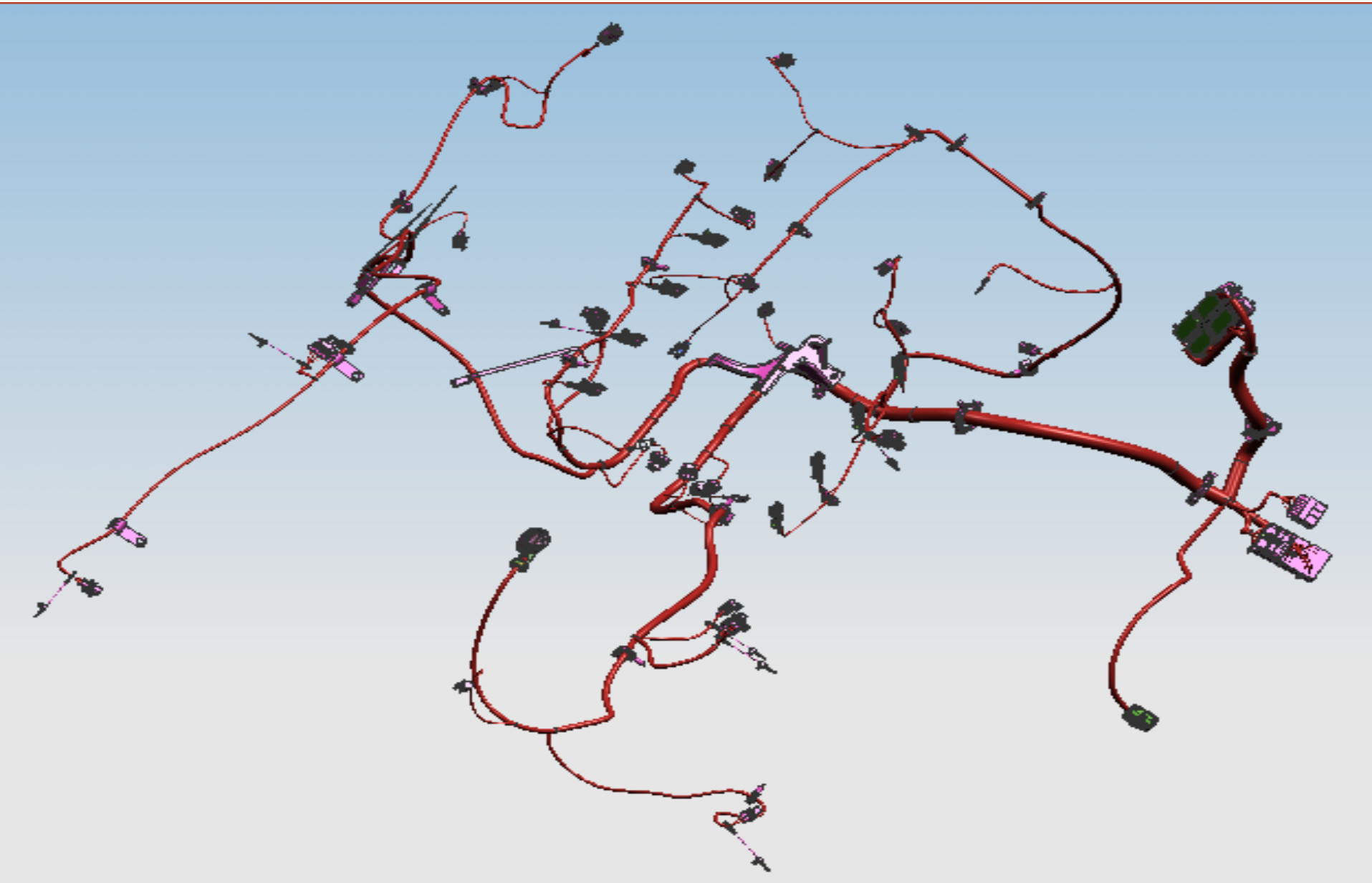

Imported Wire Data

- How Routing Electrical uses imported wire data combined with modeled bundle paths and connectors.
- Using PLMXML (.xml) versus ASCII (.hrn and .cmp) text files for connection and component lists.

© UGS Corp. 2005. All rights reserved.

Connection Lists

HRN file.

```
C4,,CONN_A,D,,CONN_B,D,18,TXL,LTBLUE,17.0881,23.7969,HARNESS1,
C6,,CONN_A,B,,CONN_C,B,16,TXL,WHTBLK,17.9186,24.7105,HARNESS1,
C8,,CONN_A,D,,CONN_C,D,14,TXL,WHTORNG,17.9186,24.7105,HARNESS1,
C3,,CONN_A,C,,CONN_B,C,18,TXL,BLK,17.0881,23.7969,HARNESS1,
C7,,CONN_A,C,,CONN_C,C,12,TXL,GREEN,17.9186,24.7105,HARNESS1,
C1,,CONN_A,A,,CONN_B,A,18,TXL,DKBLUE,17.0881,23.7969,HARNESS1,
C5,,CONN_A,A,,CONN_C,A,18,TXL,REDORNG,17.9186,24.7105,HARNESS1,
C2,,CONN_A,B,,CONN_B,B,18,TXL,ORNG,17.0881,23.7969,HARNESS1,
```

CMP file.

```
LAO_connector_2,,CONN_C,,Option 2 Connector
LAO_connector_1,,CONN_A,,Main Connector
LAO_connector_1,,CONN_B,,Option 1 Connector
```

XML file.


```
<?xml version="1.0" encoding="UTF-8" ?>
- <RouteList date="2006-04-03" time="14:01:51"
    xmlns="http://www.plmxml.org/Schemas/PLMXMLRouteListSchema" author="UGS"
    language="en" xmlns:plm="http://www.plmxml.org/Schemas/PLMXMLSchema"
    xmlns:xsi="http://www.w3.org/2001/XMLSchema-instance" schemaVersion="1.0"
    xsi:schemaLocation="http://www.plmxml.org/Schemas/PLMXMLRouteListSchema g:\ugs401.03
    \ugroute_elec\rlist\routelist.xsd">
    <Harness id="GUID-45999b24-0d7b-4158-af9d9bb975c74b4f" name="HARNESS1" />
  - <Connection id="GUID-a7d606fa-375d-4f26-8cb67db9d22df9bc" name="C7" toPin="C"
      offset="5.0" fromPin="C" multiplier="1.1" toComponentRef="GUID-a23c9fd2-4479-49cc-
      adfad24031b6ff46" fromComponentRef="GUID-07830dcb-2612-4e05-a472e17167598adf">
    - <plm:UserData>
        <plm:UserValue title="fabrication" value="HARNESS1" />
      </plm:UserData>
    - <plm:UserData>
        <plm:UserValue title="blanking_code" value="OPT2" />
      </plm:UserData>
      <ConductorOccurrence id="GUID-aadb2daa-639b-49f7-b875e168fd848fc3" length="17.9186"
        routed="auto" uniqueId="C7" cutLength="24.7105" wireClass="regular" harnessRef="GUID-
        45999b24-0d7b-4158-af9d9bb975c74b4f" conductorRef="GUID-34be12fc-d9c5-4581-
        8d515e8c7a934259" />
    </Connection>
    <Wire id="GUID-34be12fc-d9c5-4581-8d515e8c7a934259" name="C7" type="TXL"
      gauge="12.000000" colourName="GREEN" />
  - <Connection id="GUID-028ab764-2408-4ff9-b8944a526f3061fc" name="C8" toPin="D"
      offset="5.0" fromPin="D" multiplier="1.1" toComponentRef="GUID-a23c9fd2-4479-49cc-
      adfad24031b6ff46" fromComponentRef="GUID-07830dcb-2612-4e05-a472e17167598adf">
    - <plm:UserData>
        <plm:UserValue title="fabrication" value="HARNESS1" />
      </plm:UserData>
    - <plm:UserData>
        <plm:UserValue title="blanking_code" value="OPT2" />
      </plm:UserData>
      <ConductorOccurrence id="GUID-c94bcd0f-09df-46dc-98393d53573fb879" length="17.9186"
        routed="auto" uniqueId="C8" cutLength="24.7105" wireClass="regular" harnessRef="GUID-
        45999b24-0d7b-4158-af9d9bb975c74b4f" conductorRef="GUID-2100648e-3845-49d4-
        bdf02e589aa52154" />
    </Connection>
    <Wire id="GUID-2100648e-3845-49d4-bdf02e589aa52154" name="C8" type="TXL"
      gauge="14.000000" colourName="WHTORNG" />
  - <HarnessComponent id="GUID-a23c9fd2-4479-49cc-adfad24031b6ff46" type="connector"
      assigned="auto" isRouted="true" uniqueId="CONN_C" componentRef="GUID-f4115bd5-9602-
      4481-b9e059243841f388">
    - <plm:UserData>
```


© UGS Corp. 2005. All rights reserved.

Bundle size on paths

- The factors that enable Routing Electrical to automatically adjust the bundle size along each path.

© UGS Corp. 2005. All rights reserved.

Accurate Model Representation Image

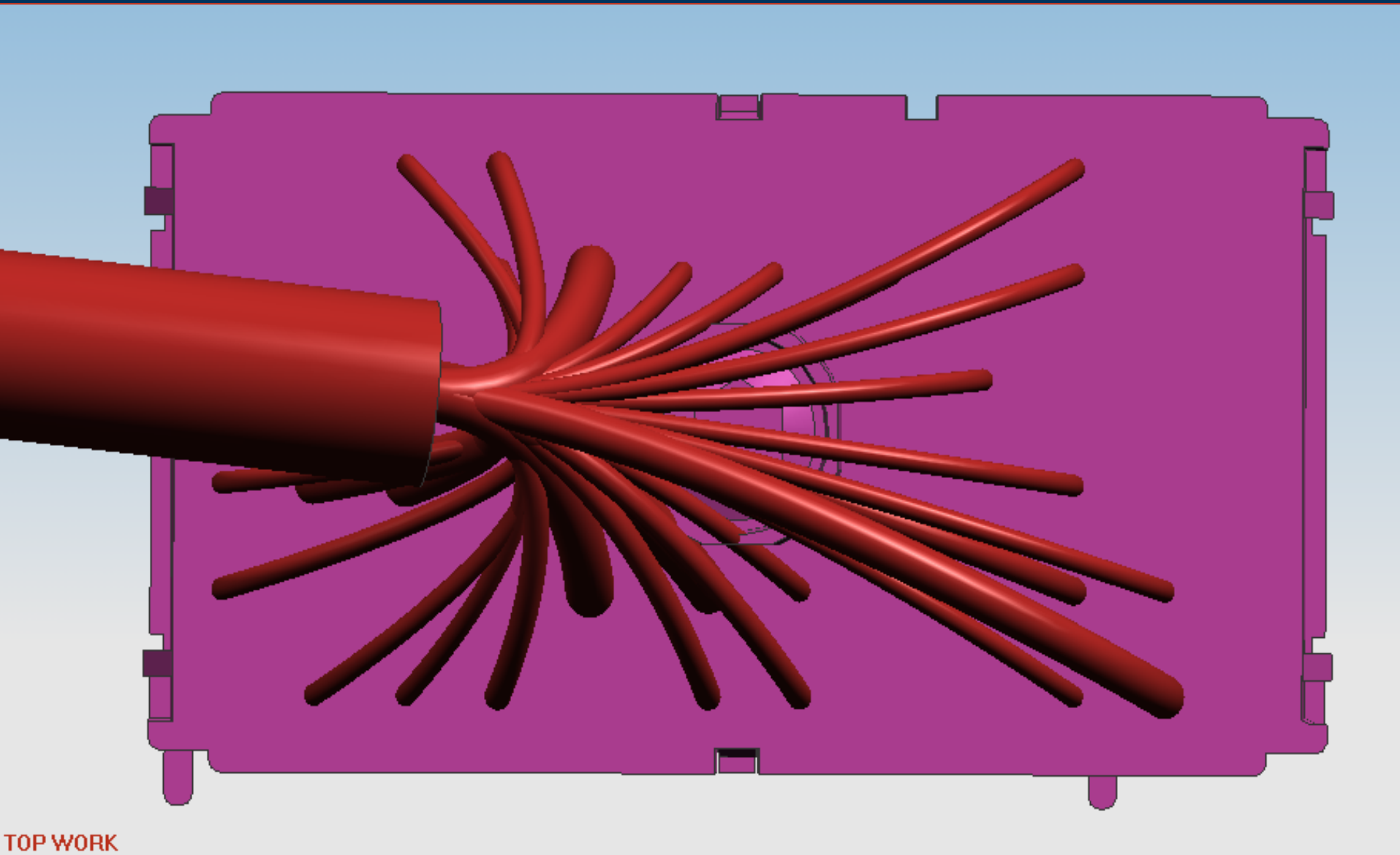

© UGS Corp. 2005. All rights reserved.

Dynamic bundle updates

- The ability to dynamically update the bundle based on the position of each connector and any constraints applied to the path.

© UGS Corp. 2005. All rights reserved.

With Fitting, Fixture, Multi Ports Image

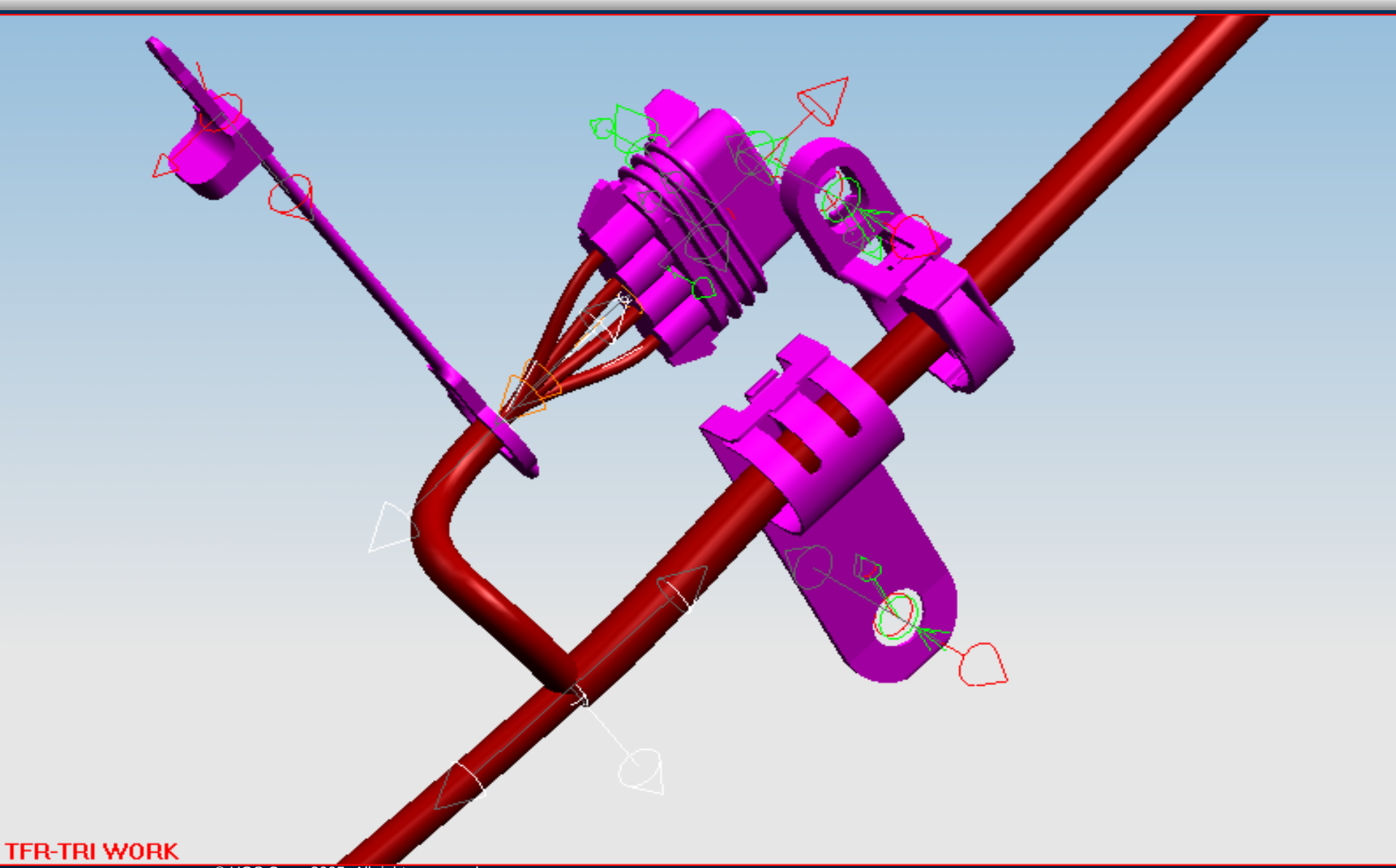

© UGS Corp. 2005. All rights reserved.

Without Fitting, Fixture, Multi Ports Image

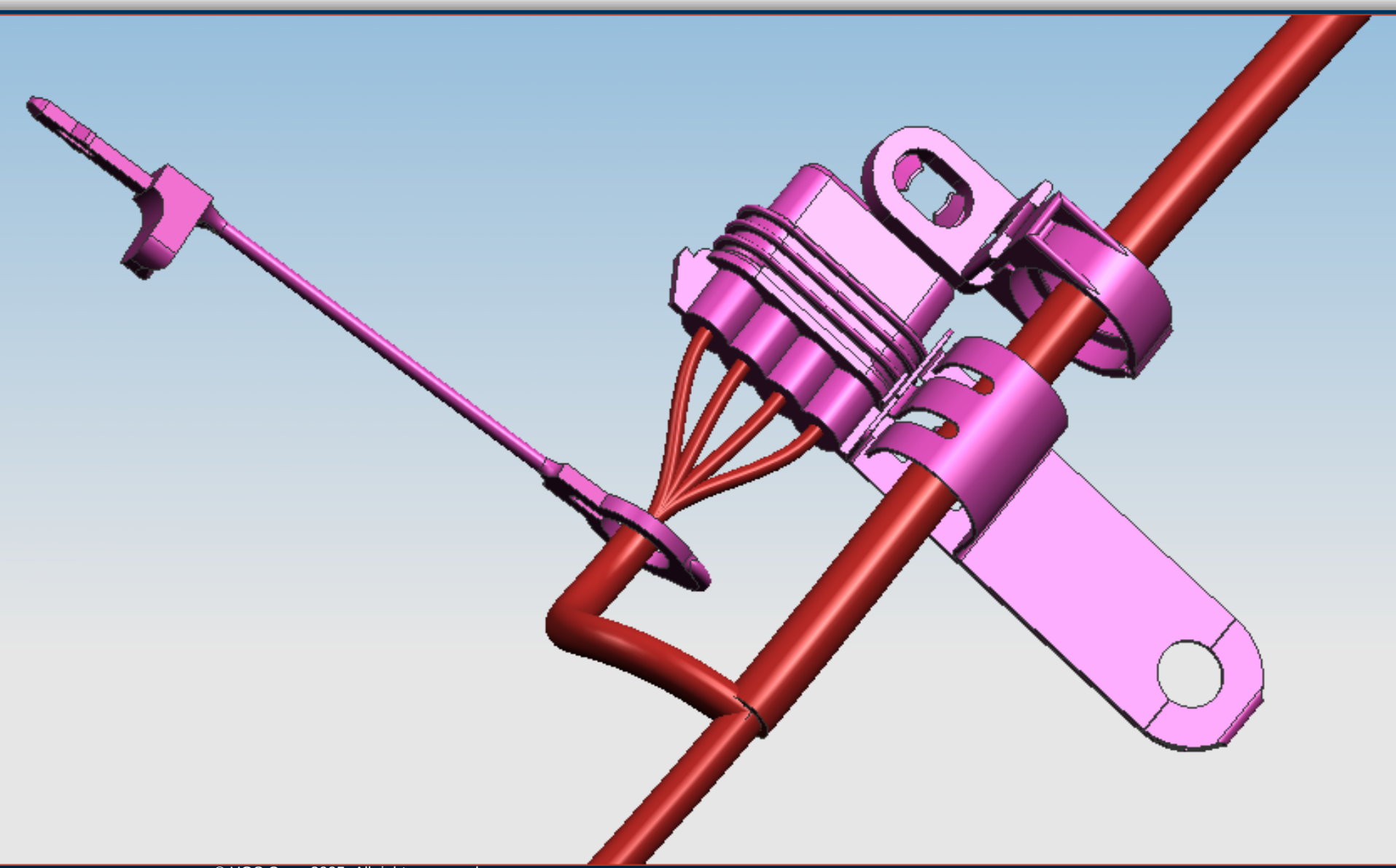

© UGS Corp. 2005. All rights reserved.

Where Routing Electrical fits in your Assembly

- Why adding a Routing Electrical assembly to a mechanical assembly is preferred.
- Alternate methods and possible pitfalls such as including Routing Electrical in your mechanical assembly.

© UGS Corp. 2005. All rights reserved.

Wire information

- Required and additional information that may be included for each wire.
- How Routing Electrical uses individual wire information throughout the operation.

© UGS Corp. 2005. All rights reserved.

Connectors

- Routing Electrical determines the correct connector for each wire based off the connection list. Using devices.
- Controlling the position of connectors relative to their electrical or electromechanical devices in the mechanical assembly.

© UGS Corp. 2005. All rights reserved.

Connector Image

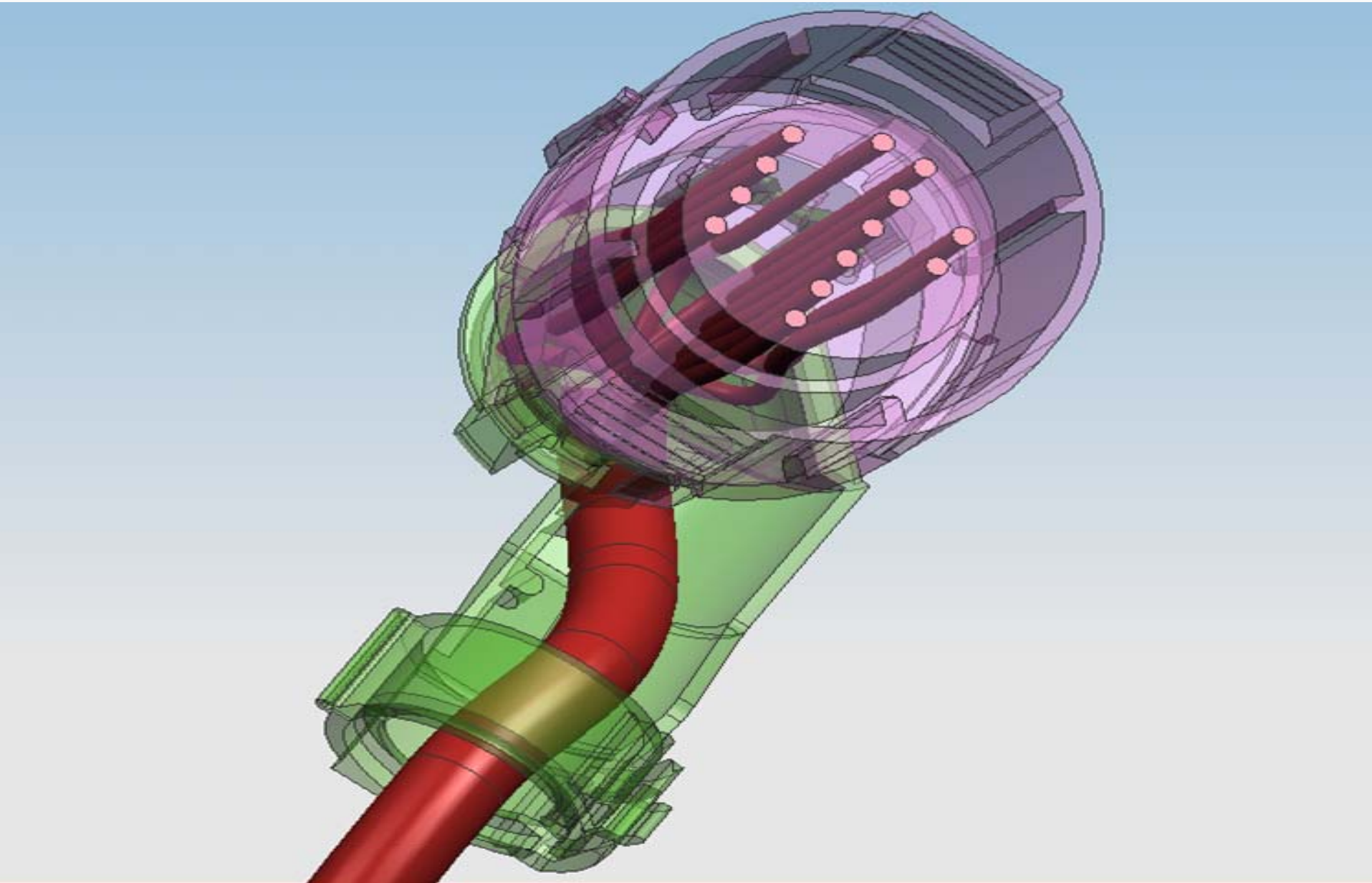

Questions?

- UGS
- GTAC 1-800-955-0000
- Routing Option 2-1-2-1

- by Mark Whitwell

© UGS Corp. 2005. All rights reserved.