A CAD/CAM System for Steam Paths of Turbine Generators

Yeoung-il Kim
(CITEK System, Korea, zero1.kim@citek.co.kr)
Cha-Soo Jun
(Gyeongsang National University, Korea, csjun@gsnu.ac.kr)

Premium Partners:

Steam Turbine Generator

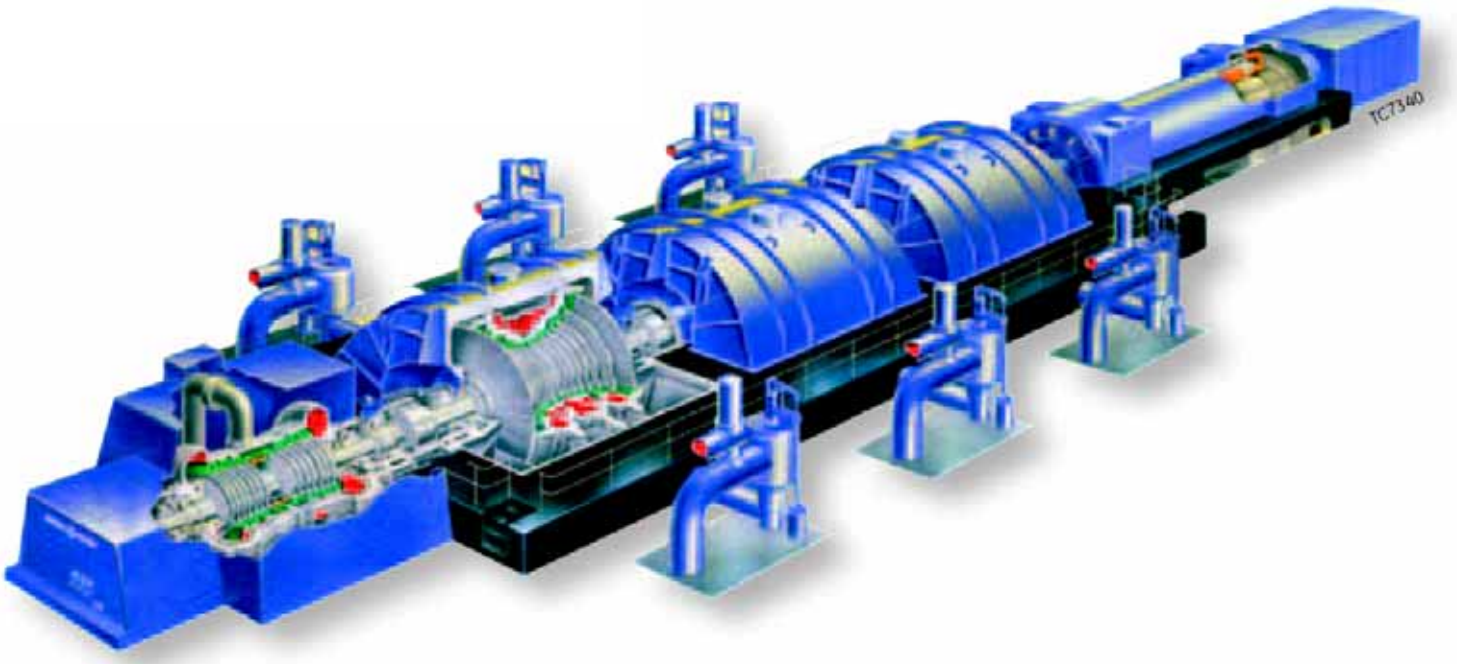

Steam Path

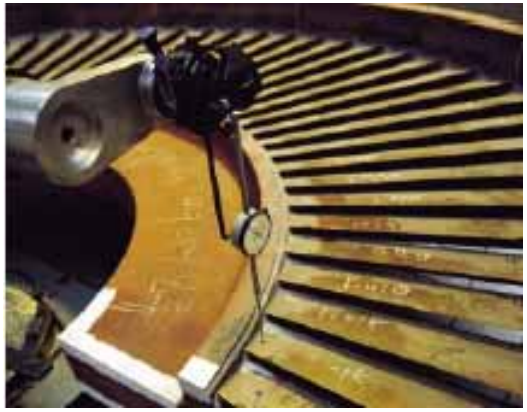

A steam path

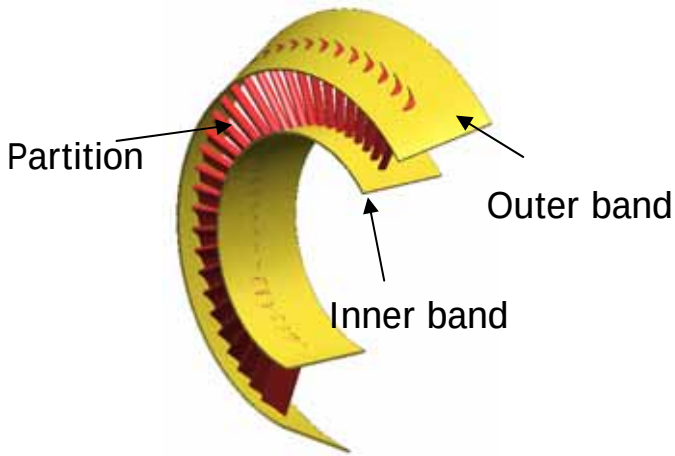

Upper half of a steam path

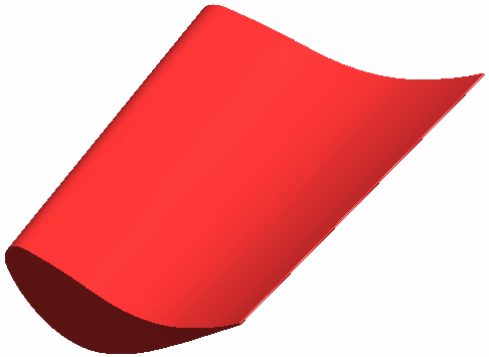

A partition

- Steam path : lowers the steam pressure, thereby generating kinetic energy.
  A “step” is the unit used for the steam path. There are 6~20 steps in the generator.
  Each step of it is composed of an upper and lower section, which are welded together
  Has two bands and a lot of partitions.
- Partition : An airfoil blade
  200 or more partitions are assembled according to the generator capacity.
- Band : Either cylindrical or conical shaped thick plates with holes.

Introduction

Background

- The Bands : The Bent Thick Plates
  1) Average thickness : 12 mm
  2) Average diameter : 1300 mm
  3) Average width : 300 mm
- The shape of holes and quantity
  1) Non-circular cross-section (similar to an airfoil)
  2) Side: Oblique ruled surface
  3) 200 or more holes/band (4,200 to 14,000 holes/turbine)
- Requirements for direct-machining
  1) Through hole making method :
     Wire EDM, Laser, and water-jet machine, etc.
  2) 5-axis control
  3) large size
  4) Special purpose equipments for setting up
- Situation

  Such a machine is unavailable in most machine shops.

The Proposed Method

It is not practical that the holes are directly machined on the bent plate

➲

1. **The holes are cut on a flat plate using a general purpose 5-axis water-jet machine**
2. **the plate is bent into the final desired shape**

Technique

- To find the exact shape of the holes on the flat plate before bending
- To generate 5-axis NC data

Hole Making Methods

Direct Machining

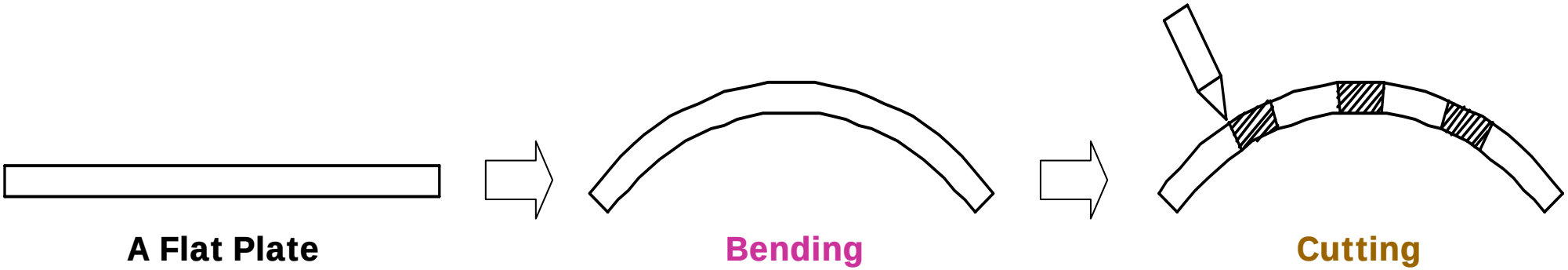

Cutting & Bending Method

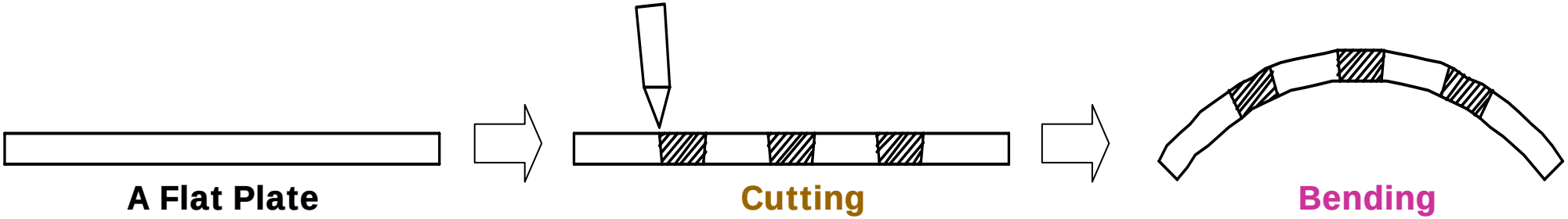

Bending

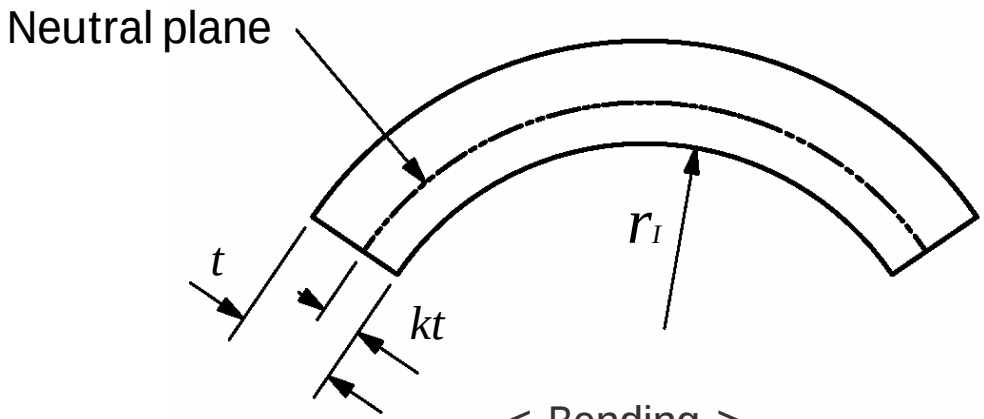

< Bending >

Neutral Plane	A plane located between these two regions (compression, tension) that is free from any force, and thus its length remains the same.
t	The thickness of the material.
r_I	The inner radius of the material.
k factor	A percentage of the thickness of the metal. Neutral plane's location is defined by k factor It can be dependent upon a number of parameters (yield stress, workhardening modulus, thickness to radius, size and shape of holes, etc) $(0.33 \leq k \leq 0.5)$

Development of the neutral plane

- The shape of a band is cylindrical or conical.

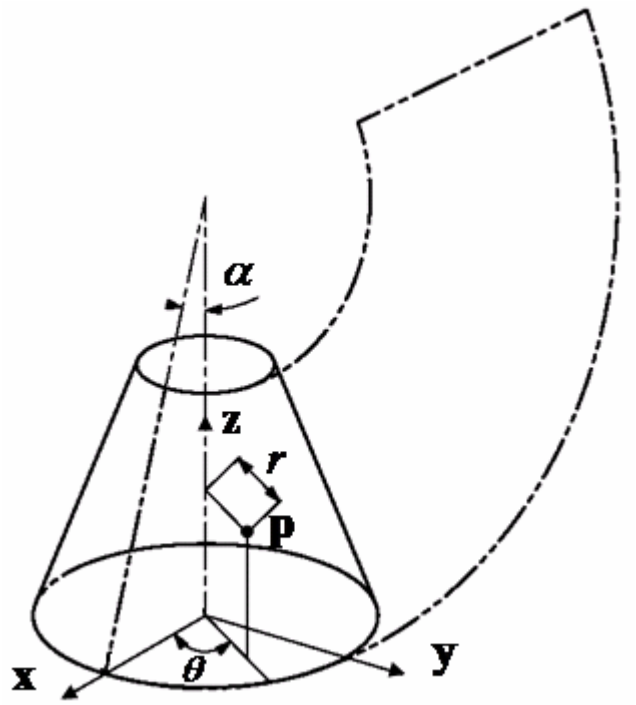

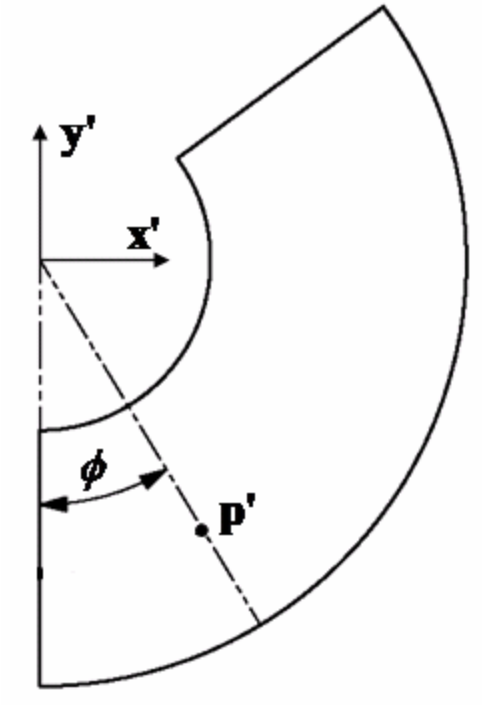

[Mapping ; **p** → **p'**]

$$\mathbf{p}' = (x', y') = \left(\frac{r\sin\phi}{\sin\alpha}, \frac{-r\cos\phi}{\sin\alpha}\right) \qquad (1)$$

where, $\phi = \theta \sin\alpha$

$\theta = \operatorname{atan2}(y, x)$

α : An angle between the center axis and the side (half angle)

<Cone Coordinates : xyz >

<Development Coordinates : x'y'>

Development of the hole(1/2)

- The shape of a hole on the flat plate is deformed during the bending process. Therefore, a method to find the shape of the holes on the flat plate is necessary
  → **Development of the hole**

[Assumption 1. Invariance of the shape of the perpendicular cross-section]

The shape and the size of perpendicular cross-section to the neutral plane are **invariant** during bending.

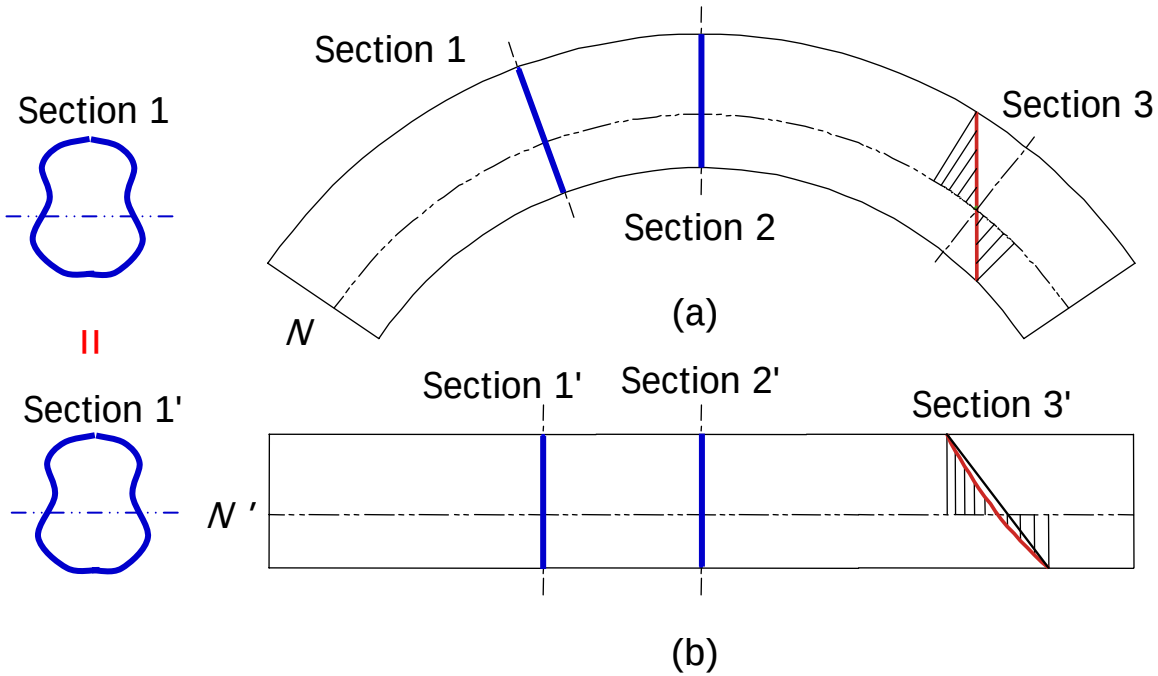

< Perpendicular sections and a non-perpendicular section >

Development of the hole(2/2)

[Theorem 1. Development of bending deformation]

1) Find the point **p** that is projected normally on the neural plane *N* of the bent plate from point **q**.
2) Find the point **p**' on the neural plane *N* of the flattened plate related to point **p**. in case of an cone, use Eq(1).
3) Find the point **q**' that point **p**' is moved to in the normal direction of the neural plane *N* by distance d.

d : the normal distance from the neutral plane N to point **q** of the bent plate.

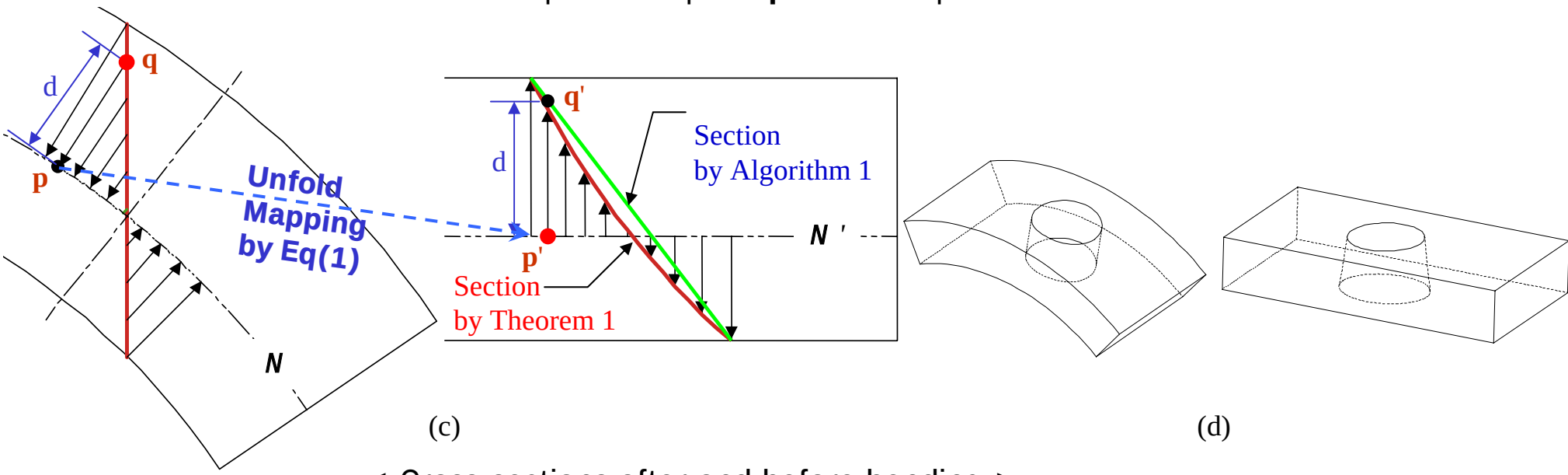

< Cross-sections after and before bending >

[Algorithm 1. Development of the Shape of the Band Hole]

1) Locate the neutral plane by the given k factor.
2) Flatten the inside and outside surfaces of the bent plate including the hole profiles on the surfaces, based on Theorem 1.
3) Make the ruled surface for the shape of the hole by connection two flattened profiles.

Examples

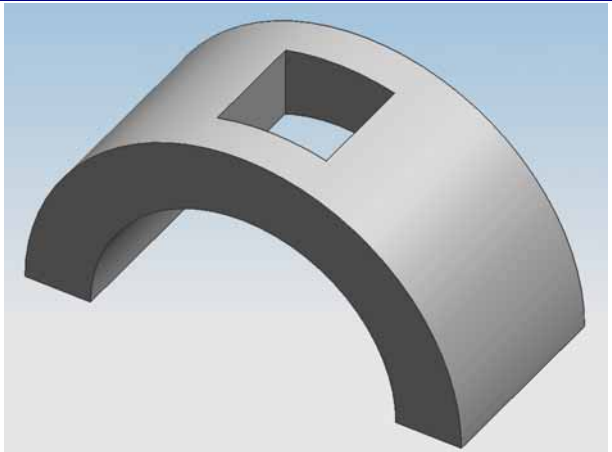

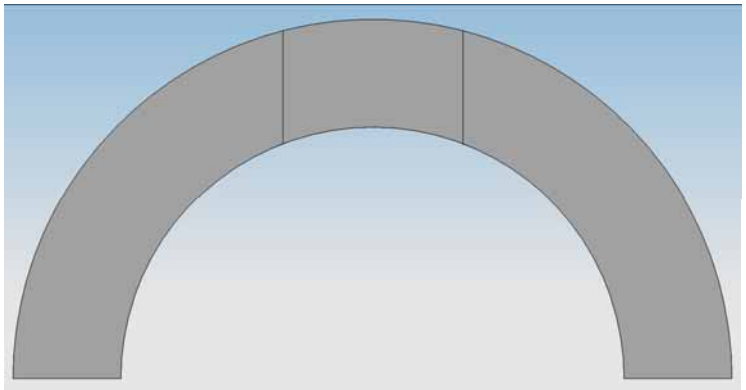

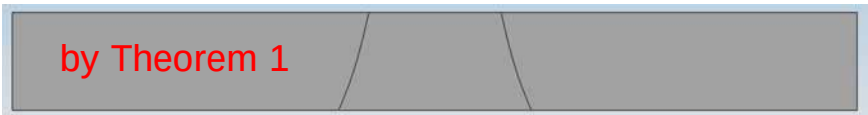

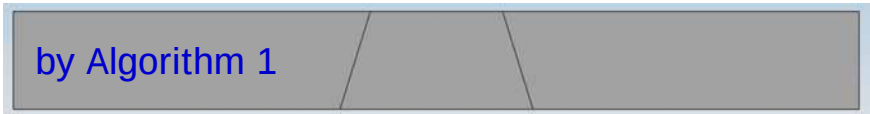

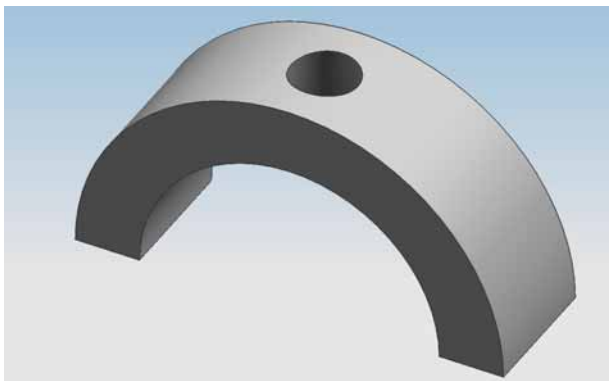

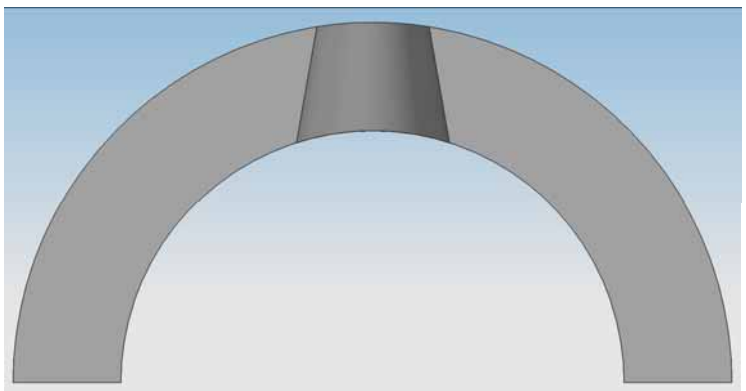

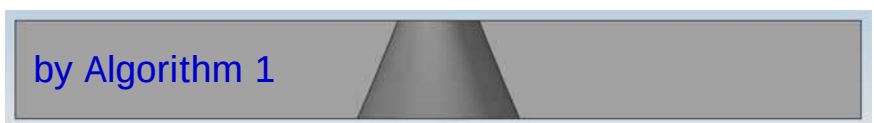

Examples

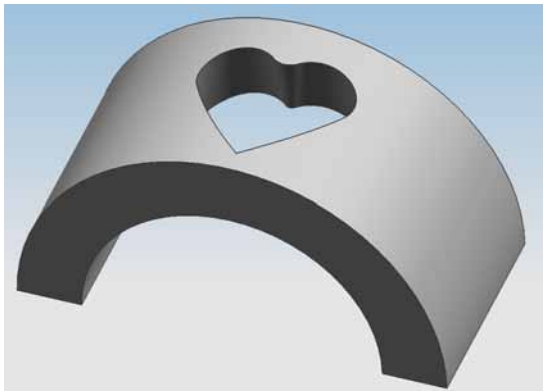

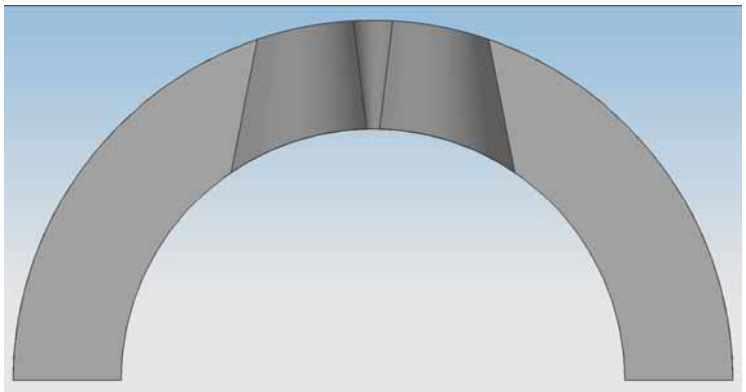

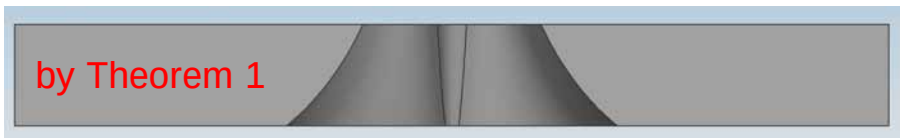

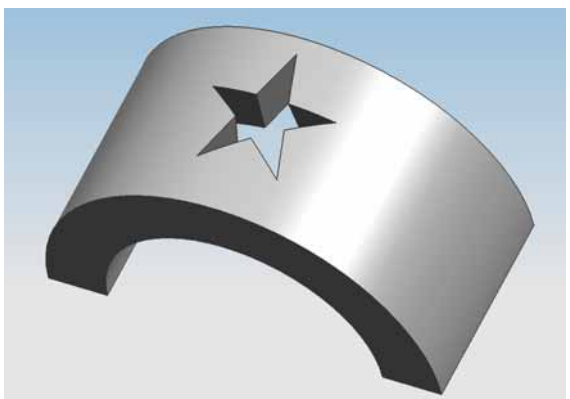

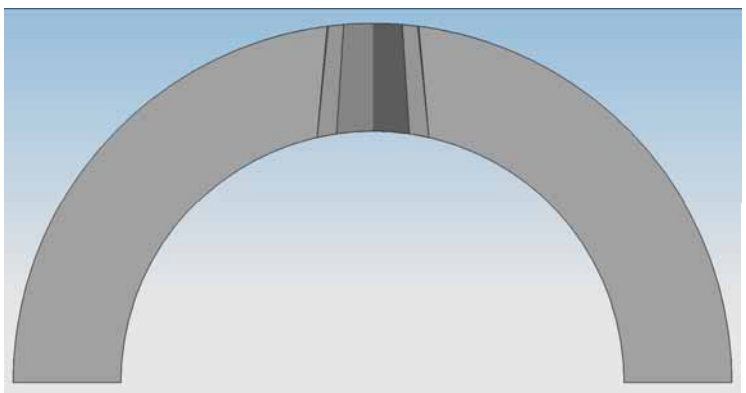

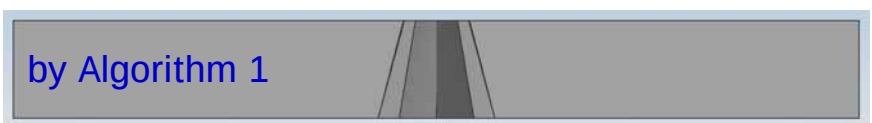

Examples

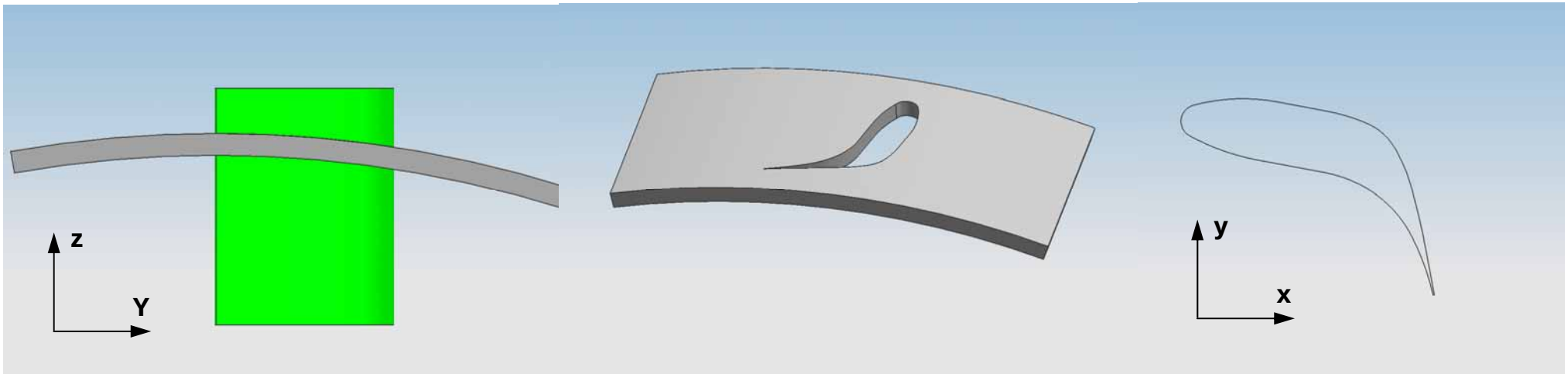

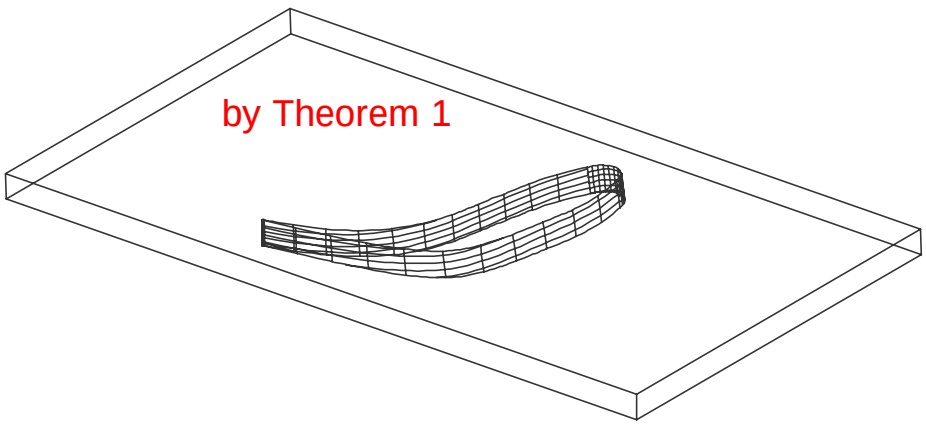

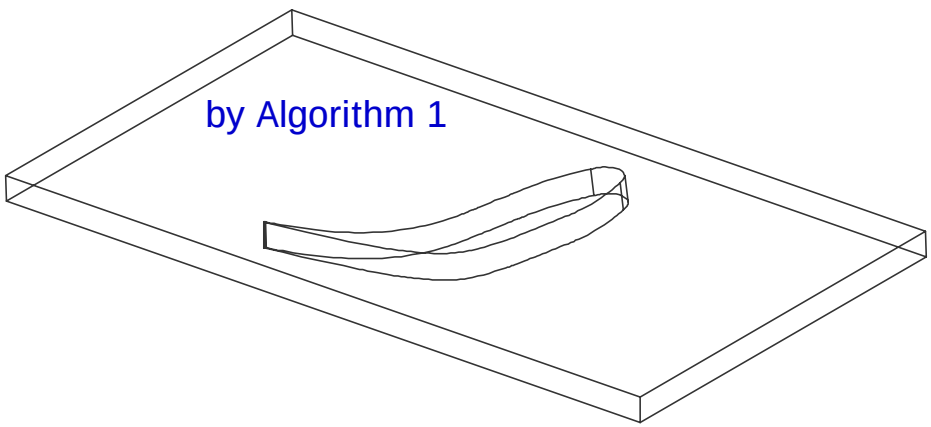

Plate Thickness : 0.375 inch = 9.525 mm

Maximum deviation: 0.0014 inch = 0.03556mm < 0.005 inch (=tolerance)

5-Axis water-jet machine

- 3 orthogonal axes and 2 rotational axes
- The angle between the **B** axis and **C** axis is 45°, and the intersection point of the two rotational axes is always a point, called a pivot or focal point.
- The location of the cutting point is determined by X, Y, and Z axes only, while the cutting direction, or orientation, is determined by B and C only.

< Water-jet machine >

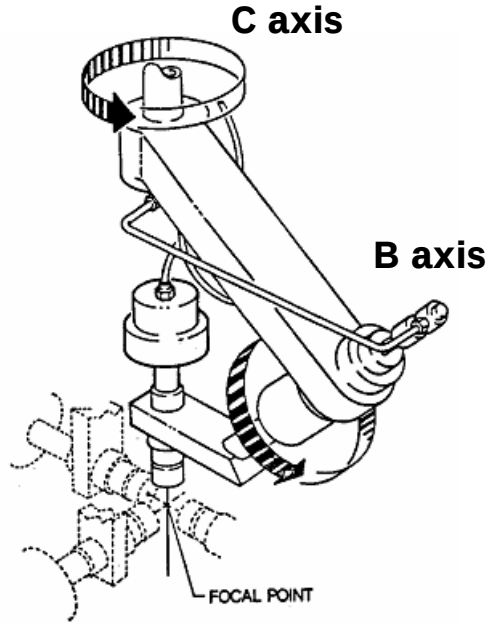

< B axis and C axis >

< Nozzle orientation >

Kinematic Modeling

When the shooting direction vector **t** is given, angle β, γ is solved by Eq. (2), (3)

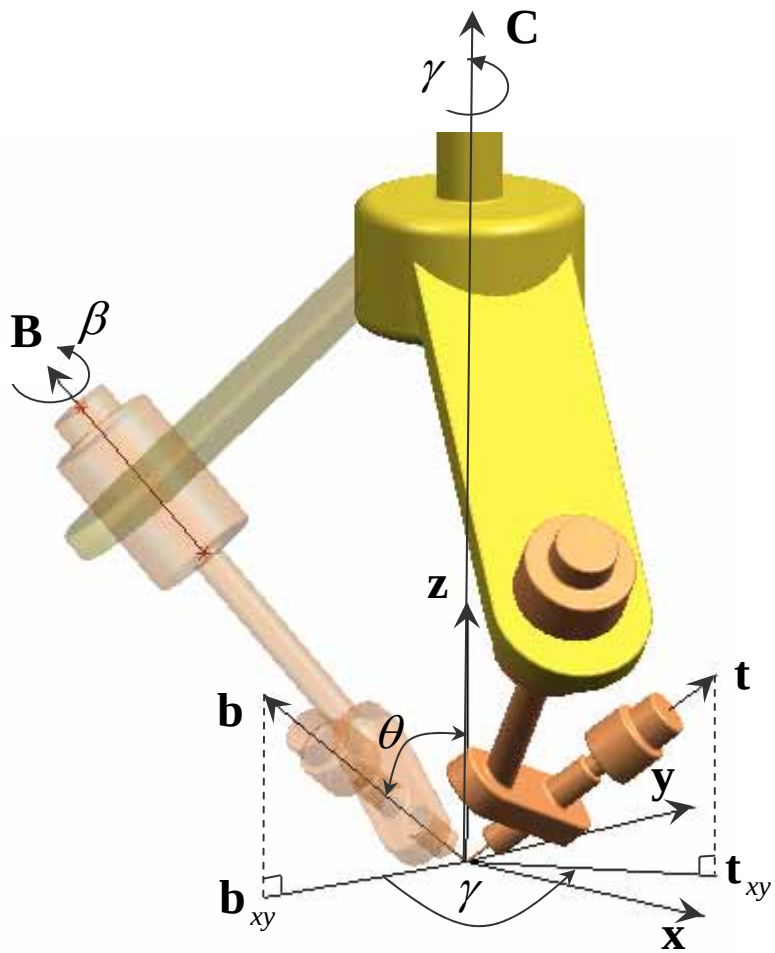

$$\beta = \cos^{-1}(2\cos\theta - 1) \qquad (2)$$

where, $\theta = \cos^{-1}(\mathbf{t}\cdot\mathbf{z})$

$$\gamma = angle\ (\mathbf{b}_{xy}, \mathbf{t}_{xy}) \qquad (3)$$

$\mathbf{b}_{xy}, \mathbf{t}_{xy}$ are the project vector of $\mathbf{b}, \mathbf{t}$ onto the $\mathbf{xy}$ plane

$\mathbf{t}$: the shooting direction vector of the water - jet machine

θ : the angle between **t** and **z**

b : the shooting vector that the **B** axis is rotated at the angle of β

β, γ : the rotational angle of **b** axis and **c** axis, respectively

NC Data Generation

- Generated based on the kinematic model of the 5-axis water-jet machine
- The top of the plate is set up as a base plane for cutting.
- The machine cuts holes using tool radius compensation functions

  (The Dia. Of the nozzle from the machine : 0.8 mm)
- The basic Process :

  1) Sampling points from a hole profile on the base plane using cutting tolerance

  2) Setting the orientation at each point according to the ruled line.

```
Cone        -0.392737    45.967376   -331.668128
-0.006837    -0.016016     2.506859     1.859655
   A    102.784193     5.382991    -10.849442     5.382991    45.967376   -331.668128
   A    101.471014    -2.407103     -9.536263    -2.407103    45.967376   -331.668128
   L     -9.536263    -2.407103    -10.849442     5.382991
   L    101.471014    -2.407103    102.784193     5.382991
   1      0.000000     0.000000     7.771200    150.697501
   2      0.002553     0.001392     7.771631    150.665010
   3      0.005273     0.002466     7.771361    150.640822
   4      0.008006     0.003508     7.767203    150.641521
   5      0.010687     0.004646     7.759737    150.661300
   6      0.013336     0.005851     7.753433    150.671164
   7      0.015976     0.007084     7.751901    150.647992
   8      0.018619     0.008316     7.754296    150.598964
   9      0.026535     0.011820     7.767479    150.423748
.................................................................
 242      0.000000     0.000000     7.771200    150.697501
```

CL Data

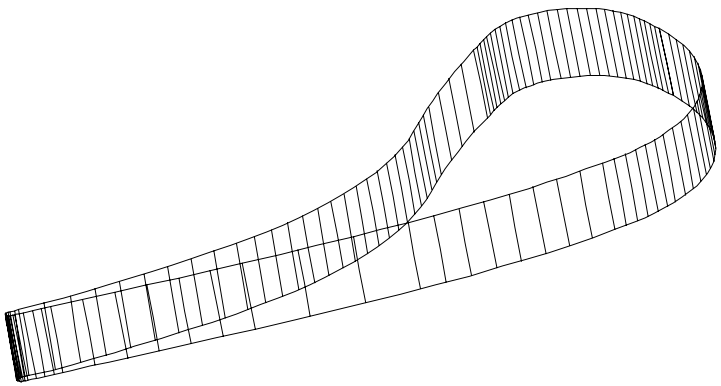

5-axis Cutting Data

System implementation - Input

New Part Creation

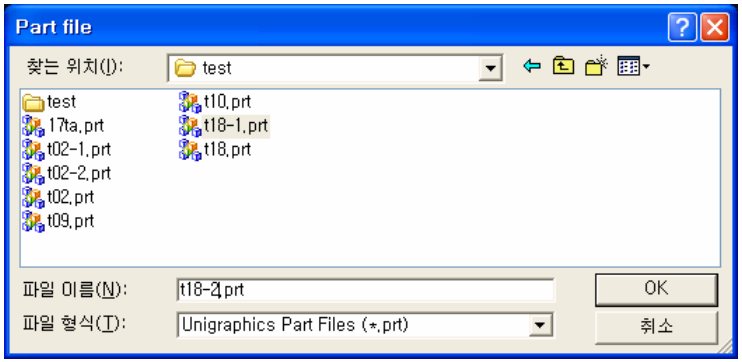

Input IGES File

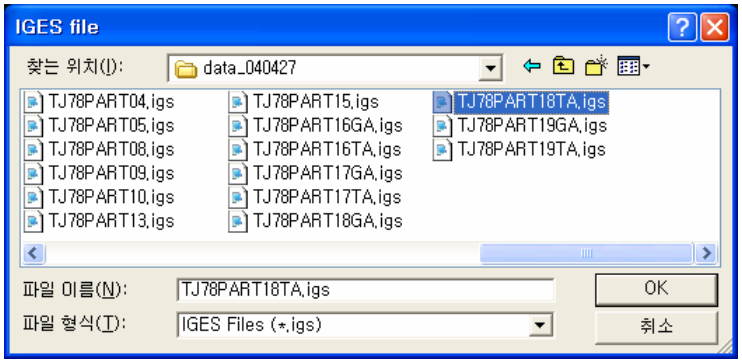

Import

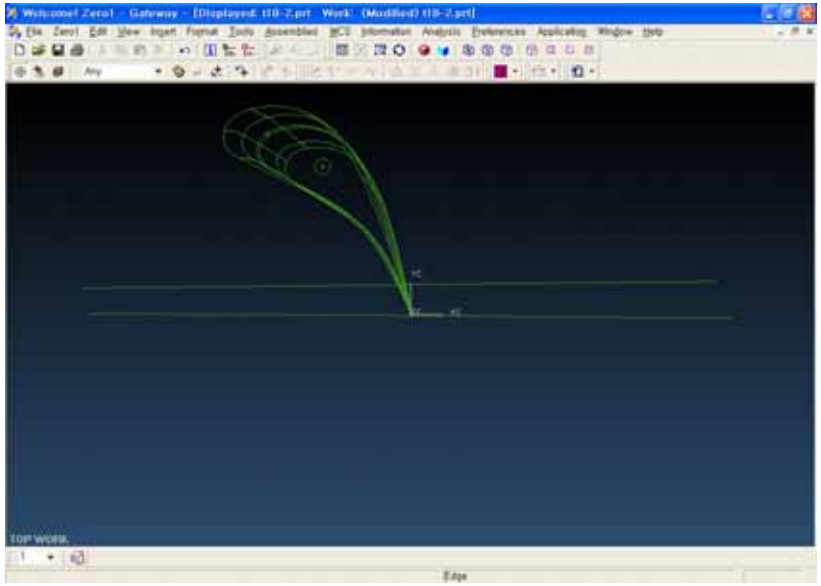

- Partition
- Inner & Outer Band Center Line
- Rotational Axis

Various cases of input(1/2)

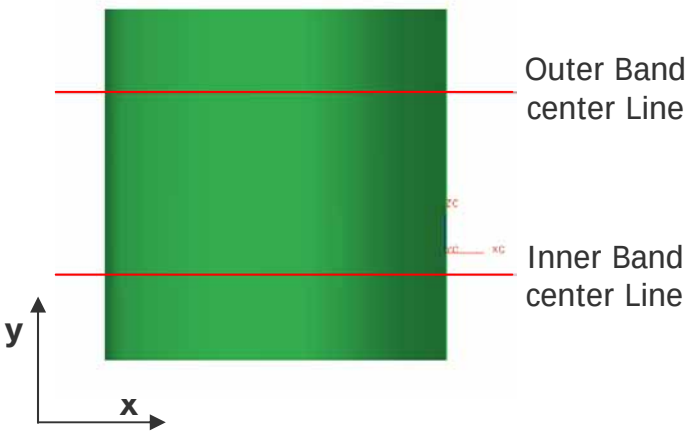

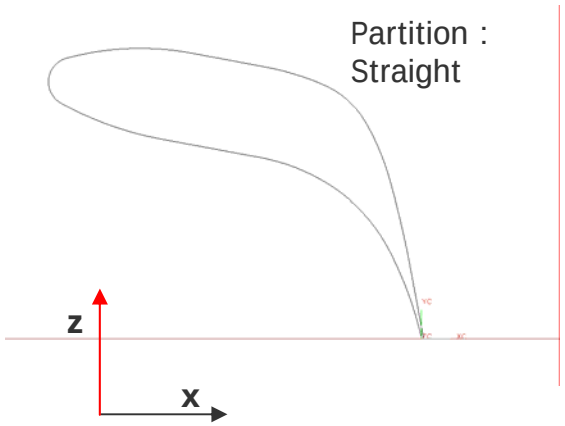

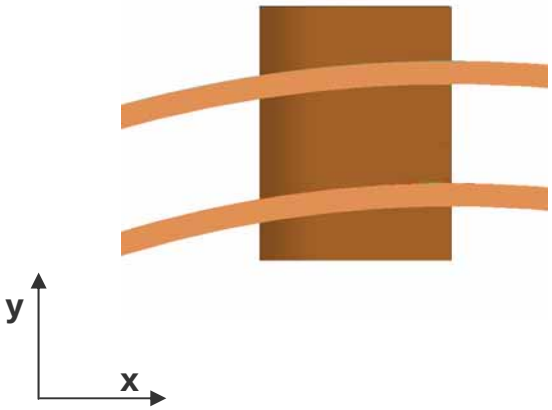

<In case that the center line of the band line is parallel with x axis>

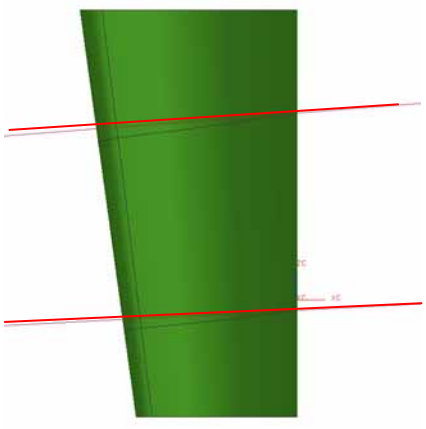

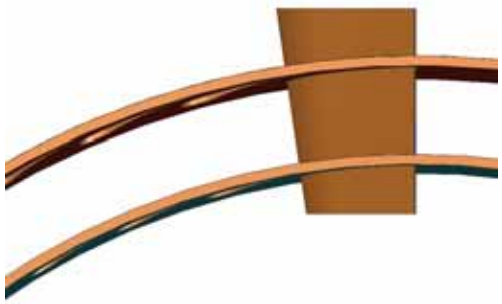

<In case that the center line of the band line is inclined>

Various cases of input(2/2)

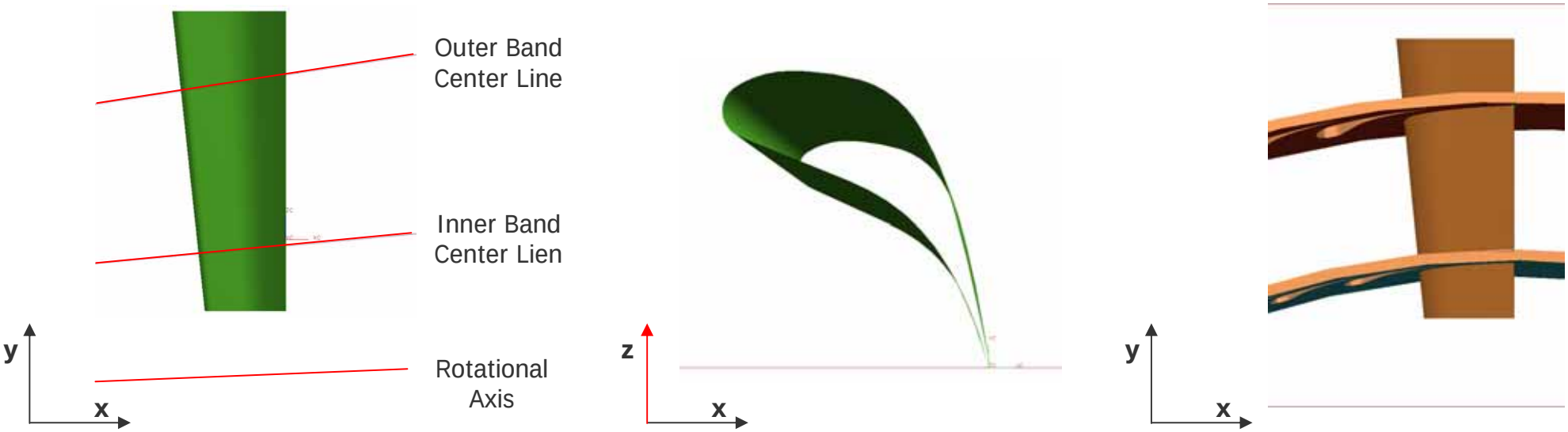

<In case that the center line of the band line and the rotational axis are inclined>

<In case that the rotational direction is CCW>

Modeling & Verification

- Generation of 3D solid models of two bands and partitions from input curve entities.

- Verification of the hole pitch

  The system measures the hole pitch and displays it through a dialog box

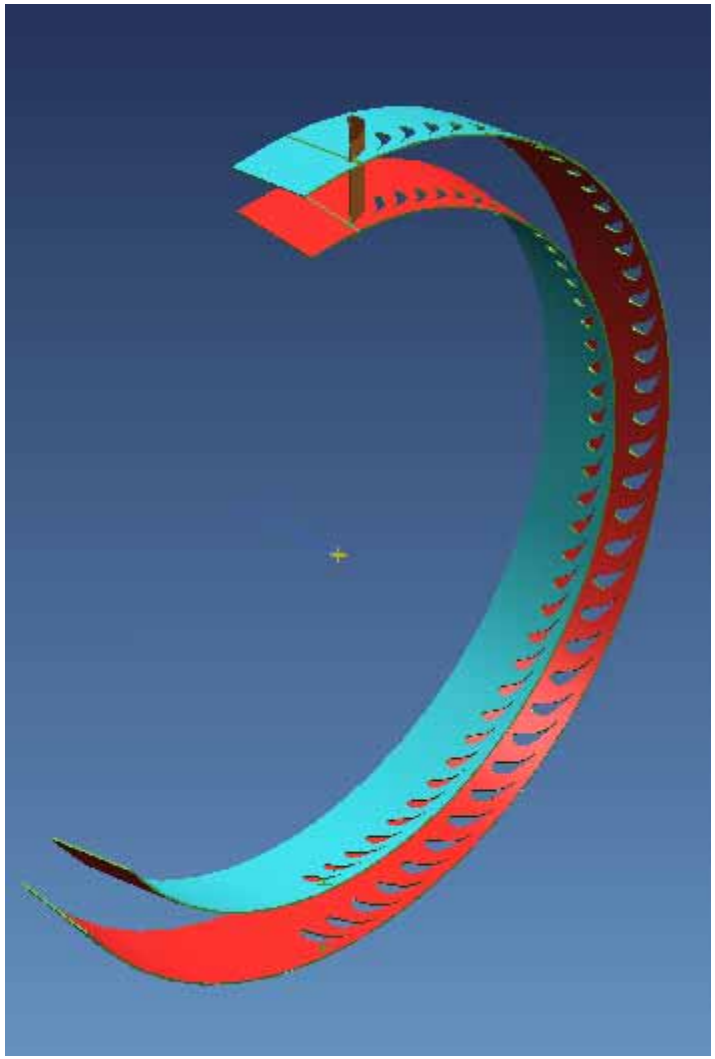

Output

< Inner & Outer Band Models >

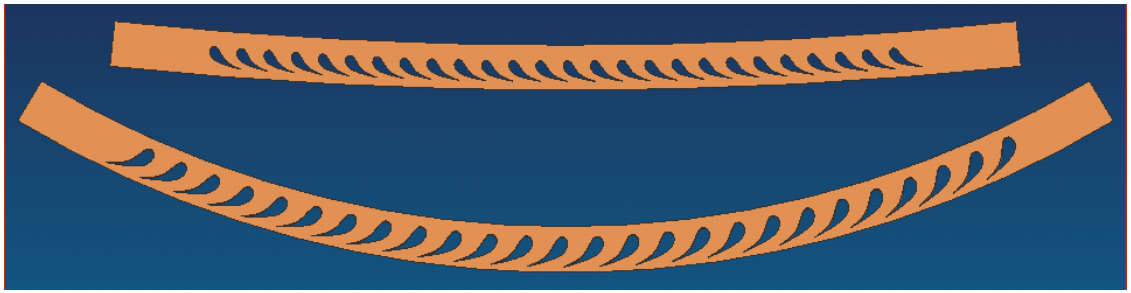

<Developed Part Models>

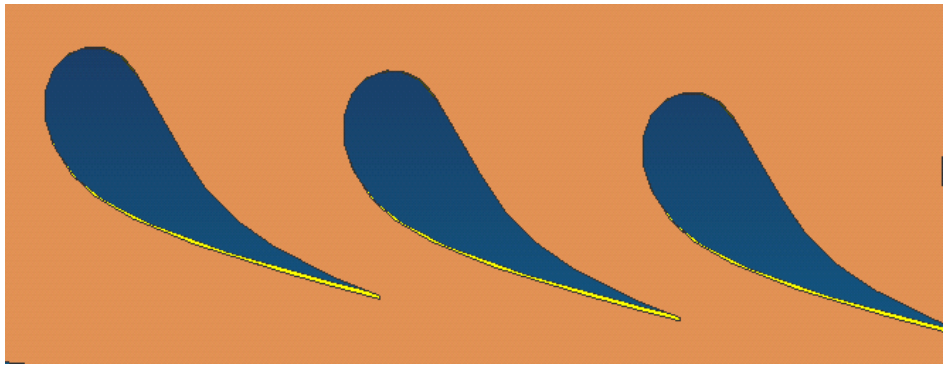

<Blade Holes>

Cutting Simulation

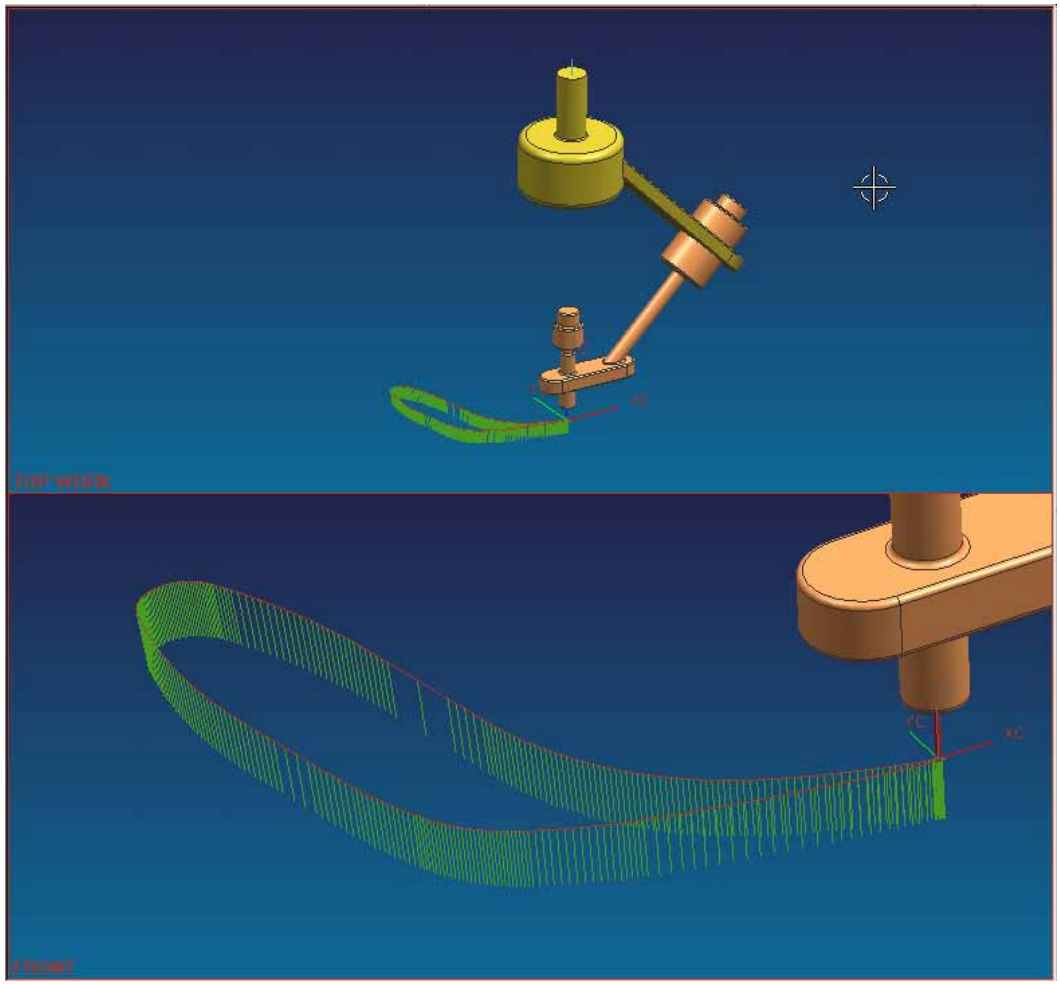

Results

Before Bending

After Bending

Results

Halves of Steam Paths

Conclusions

1. A new hole making process for bent thick plates

2. Theorem 1. “Development of bending deformation”

   Algorithm 1. “Development of the shape of the band hole”

3. The NC data generation based on the kinematic model of the machine.

4. Implementation in C using Unigraphics and API.

5. Results of applications in the field
   - successfully used in practice
   - Machining accuracy is improved
   - Manual finishing time for assembly is reduced by ten minutes for each hole (the average number of the holes is 4,200 to 14,000)