Ideas Simulation to NX 4 Transition
A Painless Strategy

Bill Chen
Director, Software Solutions
bill.chen@ata-e.com

Chris Graham
christopher.graham@ata-e.com

Kurt Knutson
kurt.knutson@ata-e.com

ATA ENGINEERING, INC.

www.ata-e.com

Premium Partners: BCT hp invent intel Microsoft

Topics

- Introduction
- Objectives
- I-deas Centric Analysis Process Highlights
- NX 4 Strengths compared to I-deas Simulation
- Examples
- I-deas CAE Features Not Supported in NX 4
- Strategy for Transition

Who may benefit from this presentation?

Intended Audience

- I-deas Simulation Users who are interested in migrating to UG NX 4 Advance Simulation
  - Casual – “I’m not being rushed so I’ll wait and see”
  - Semi-serious – “I know it’s coming and I have to help develop a transition plan”
  - Serious – “I was told that we’re switching tomorrow to NX 4”
- Managers or administrators who need to make an assessment or develop a migration plan
- Marginal benefit for people who has already transitioned into NX 4
- Potential benefit for the CAD or “design only” users who may need to support analysts

Transition Issues Are Many and Complex

A Simplified View

- Internal
  - Training
  - Data Migration
  - Associated Tools Migration
  - Support Infrastructure
  - Project Schedule
  - Cost
- External
  - Competitiveness
  - NX 4 Adv Simulation ☞ *Scope of this presentation*

Objectives

- To present an I-deas CAE to NX transition approach that minimizes impact to an I-deas centric analysis process

NX 4 Advance Simulation is Approaching Feature Parity with I-deas

- To assess NX 4 Advance Simulation capabilities as compared to I-deas.
- To propose a “best of both worlds” strategy that leverages the ability to access NX 4 and I-deas via dual licensing

The following is solely the opinion of the presenter which is based on a limited subset of conditions and experience

Highlights of An I-deas Centric Analysis Process

- Geometry Preparation
  - Access existing part or assembly, import or create new geometry or derive part geometry from an assembly
  - Cleanup (fix and simplify)
  - Partitioning and mid-surfacing
  - Redefining mesh domain topology (Section Meshing)
- Mesh Generation
  - Structured vs unstructured mesh or mixed
  - Assemble mesh (Assembly FEM)
- Model Preparation
  - Import FEM from foreign mesh generators (pre-processor)
  - Define loads and boundary conditions
  - Export to third party solvers
- FEM Solve
  - Structural
  - Thermal and/or Flow
- Results Post-processing
  - Supplemental processing in Excel or other third party software

Highlights of NX 4 Strengths in Geometry Preparation

- NX CAD capability
  - Feature hiding/suppression capability
  - Part and assembly navigators
- Import from foreign CAD
  - Native files from Catia and Pro/E solids
- More robust toolsets to “idealize” b-rep geometry or “orphaned part”
  - De-featuring
  - Modification with trim and basic Boolean operations
  - Surface and patch generation
  - Solid geometry creation from extracted surfaces
- Four data structures to provide greater flexibility in FEM creation

NX Data Structures

- Four Data Structures for CAD and CAE data
  - Master Part (*.prt)
    - Design part (CAD)
  - Idealized Part (*_i.prt) (Optional)
    - Idealized copy of the design part
    - Remove small features, subdivide faces for FEM
  - FEM (*_fem.fem)
    - CAE abstraction layer with polygonal geometry (akin to section meshing)
    - Mesh definition
  - Simulation (*_sim.sim)
    - Loads and boundary conditions
    - Solve parameters
- All are associative (one direction)
- Robust Export Capability
  - Ideaslized part as solid geometry for other mesher
  - FEM and Simulation as third party FEM input decks

Healing imported geometry

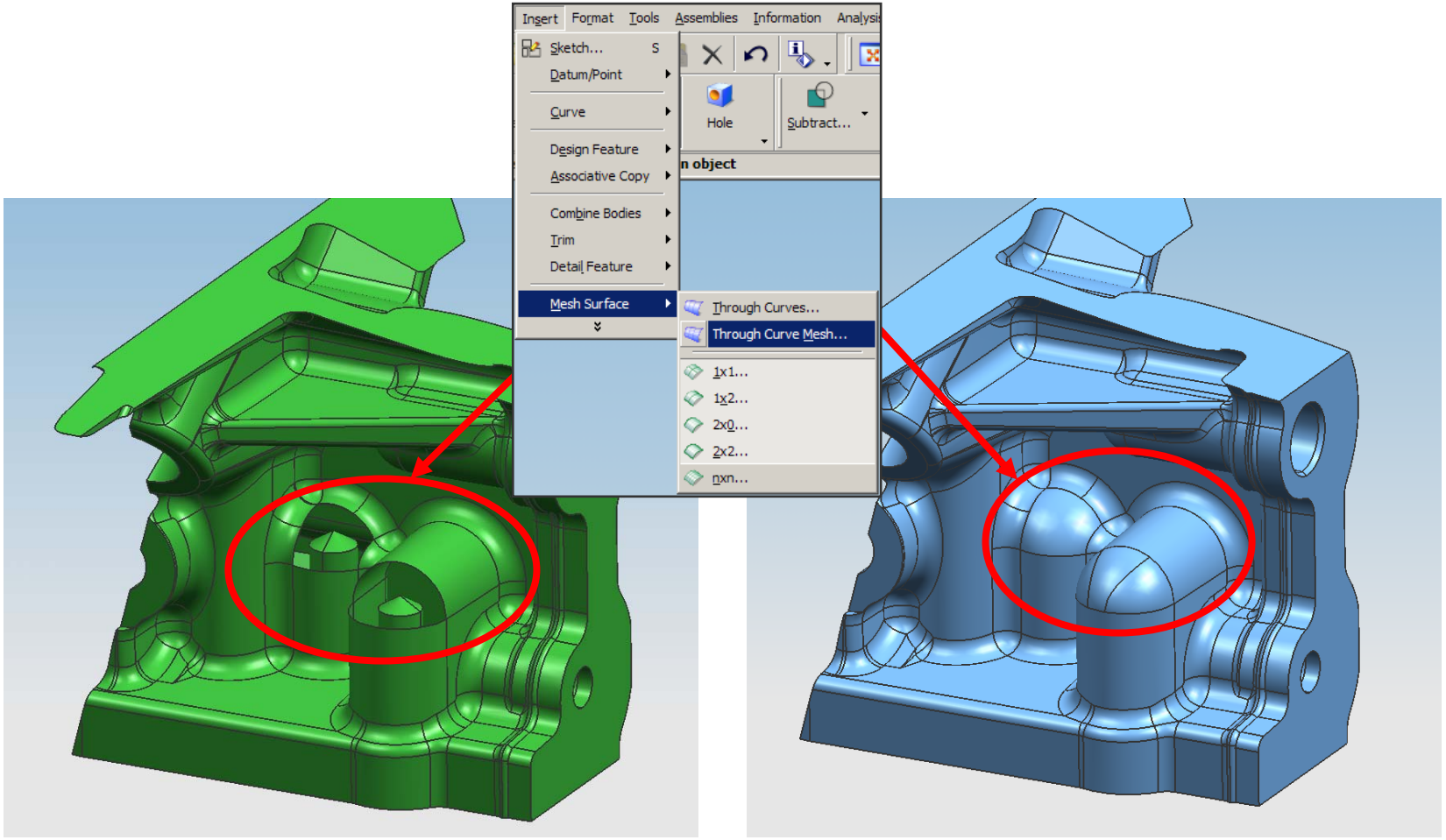

Imported geometry can be quickly healed by creating surfaces and patching them to meshable solids

Automatic Hole and Blend Removal on Parts Without History Tree

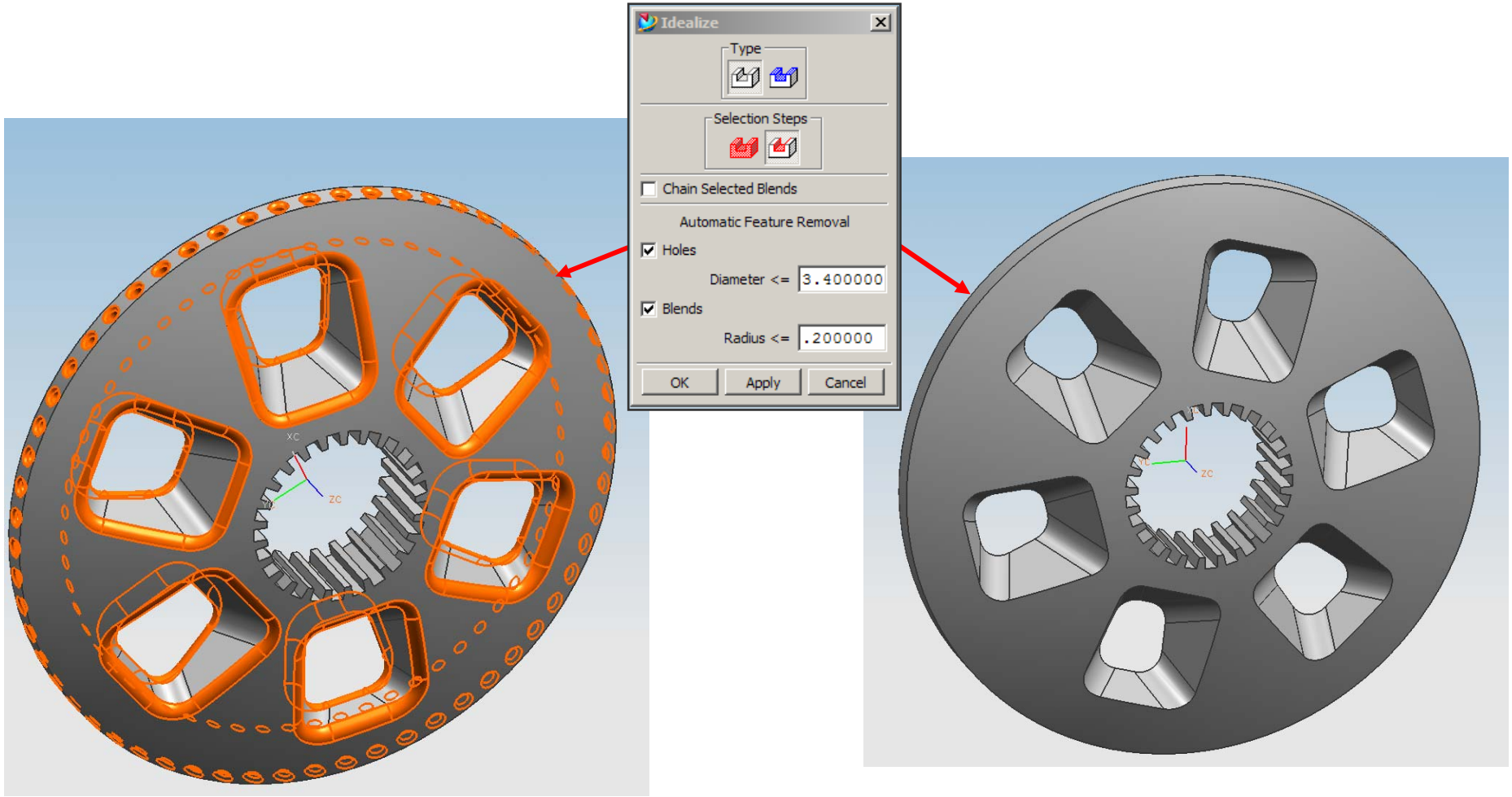

Automatic removal of blends and holes allows for improved process flow during pre-processing

Easily Create Solid From Existing Part Surfaces

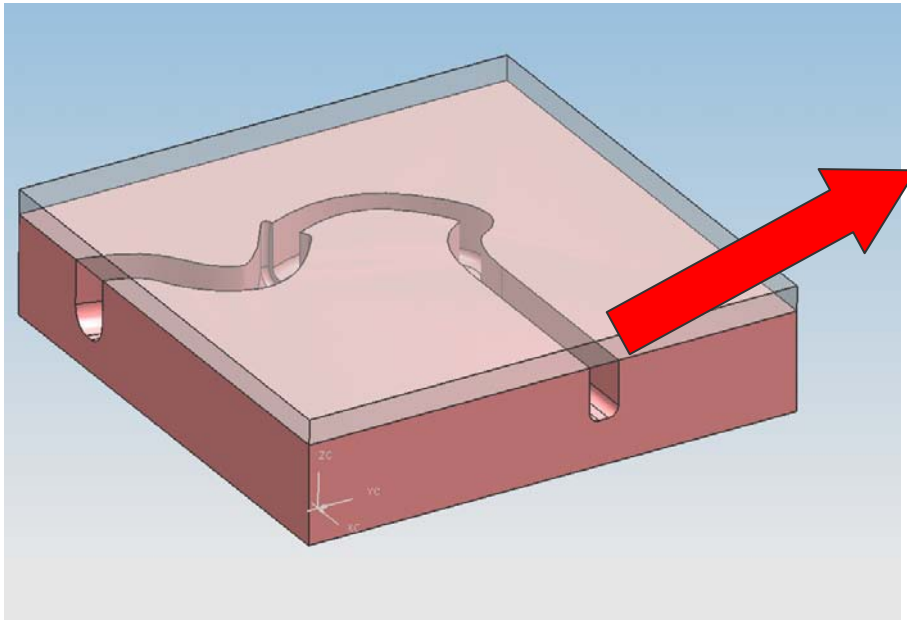

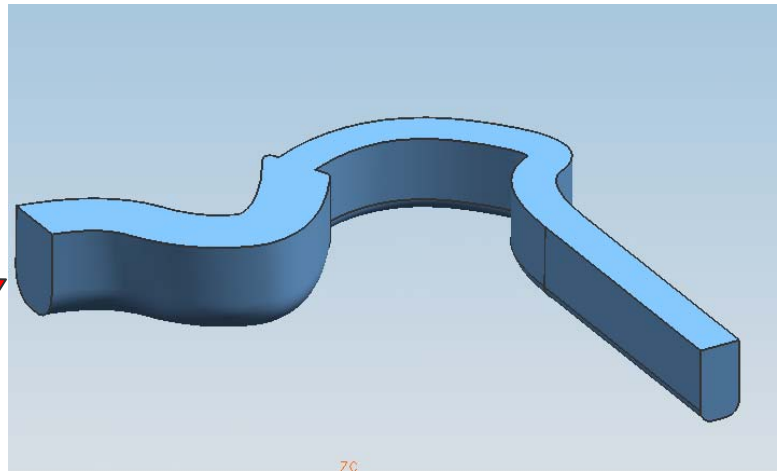

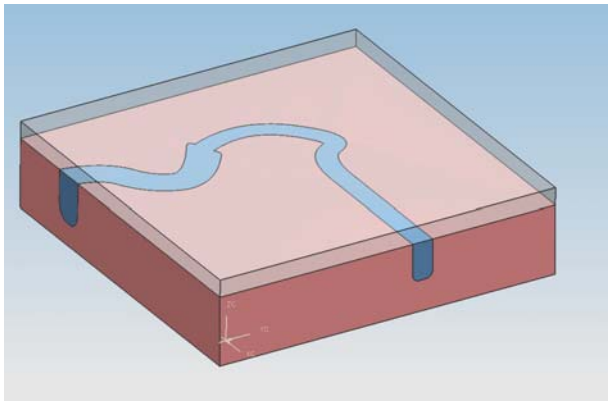

Mid-surfacing Complicated Geometry

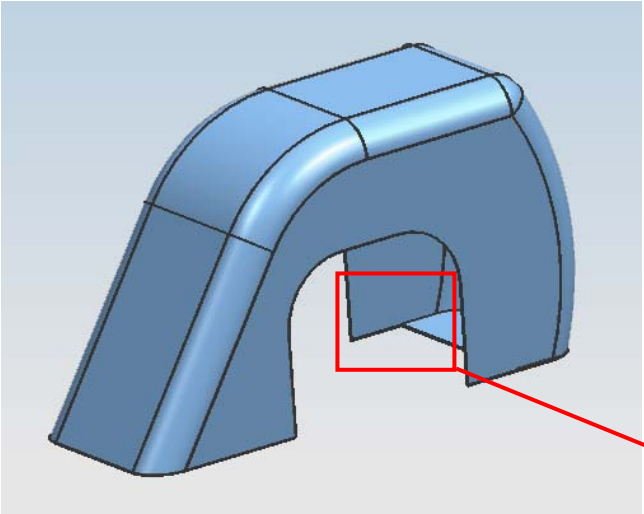

NX mid-surfaces complicated intersections for sheet metal parts

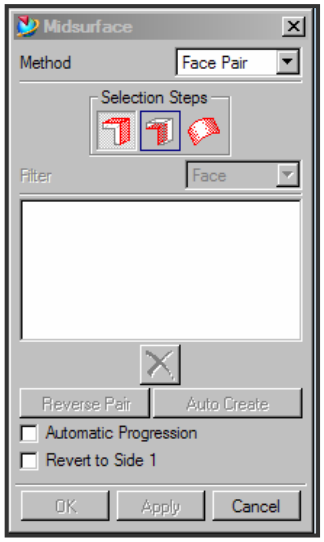

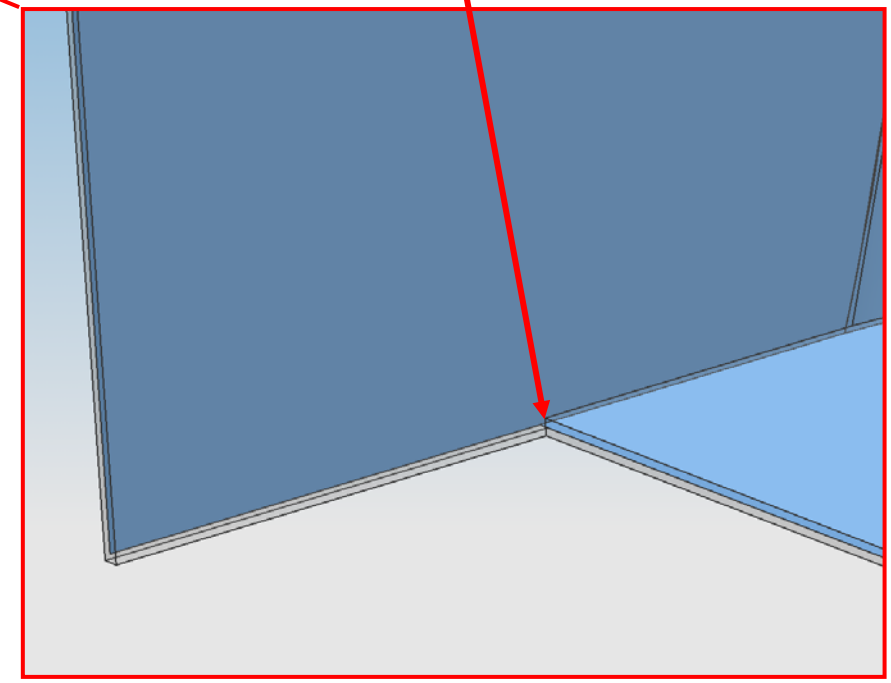

Highlights of NX 4 Strengths in Meshing

- Automatic abstraction (polygonal geometry creation)
  - Easily modify “polygonal” geometry
  - Areas that can be troublesome are pinched and dropped automatically
  - However, edges and areas that are small and hard to mesh can be recovered
- Unstructured meshing
  - Robust tet mesher (due better preparation of the meshing domain)
  - Robust automated shell mesher

Automatic Abstraction Allows for Quick Meshing of Complex Parts

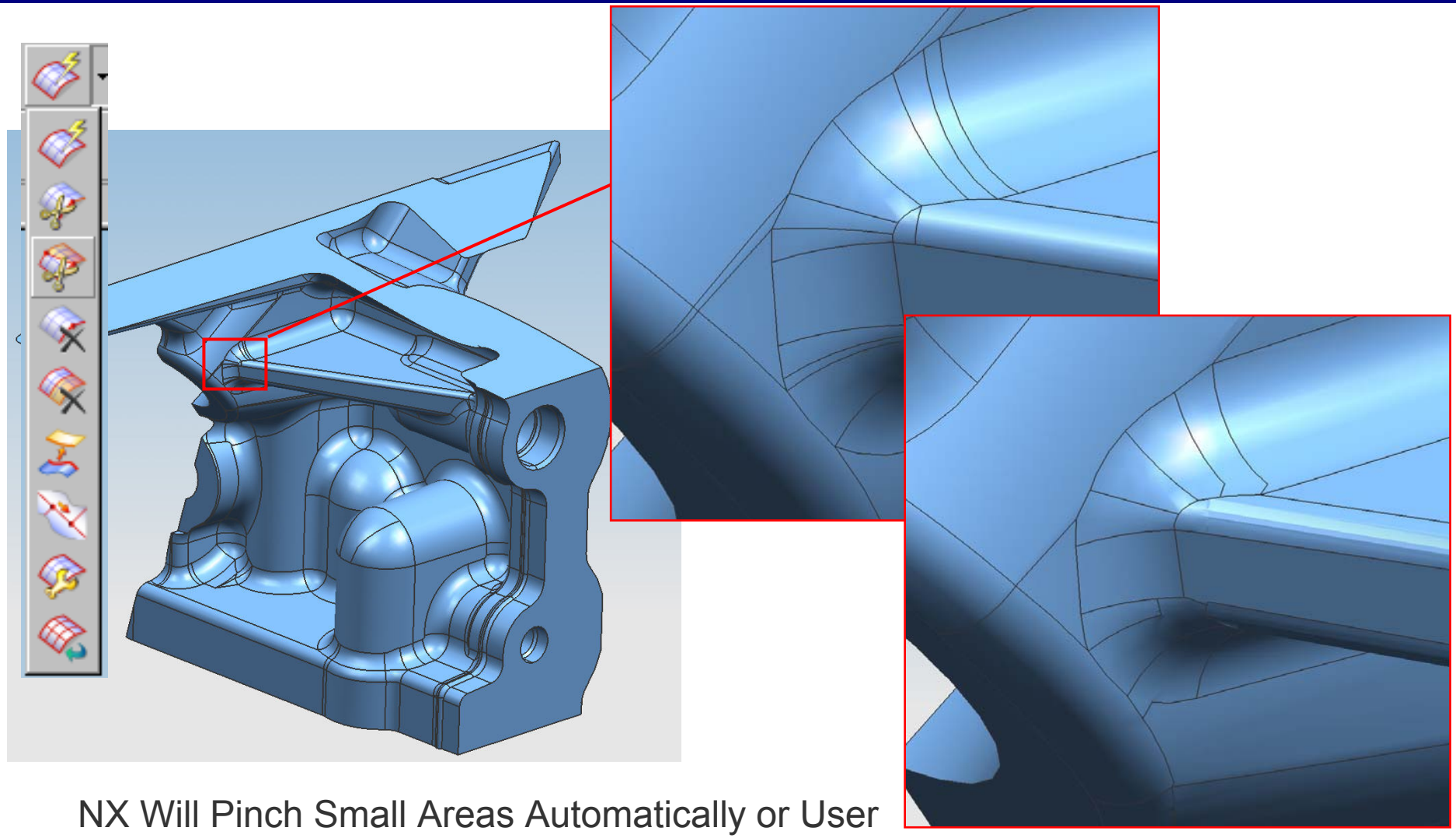

NX Will Pinch Small Areas Automatically or User Can Combine and Split Surfaces, Edges at Will

Robust Tetrahedral Mesh Generator for Complex Parts

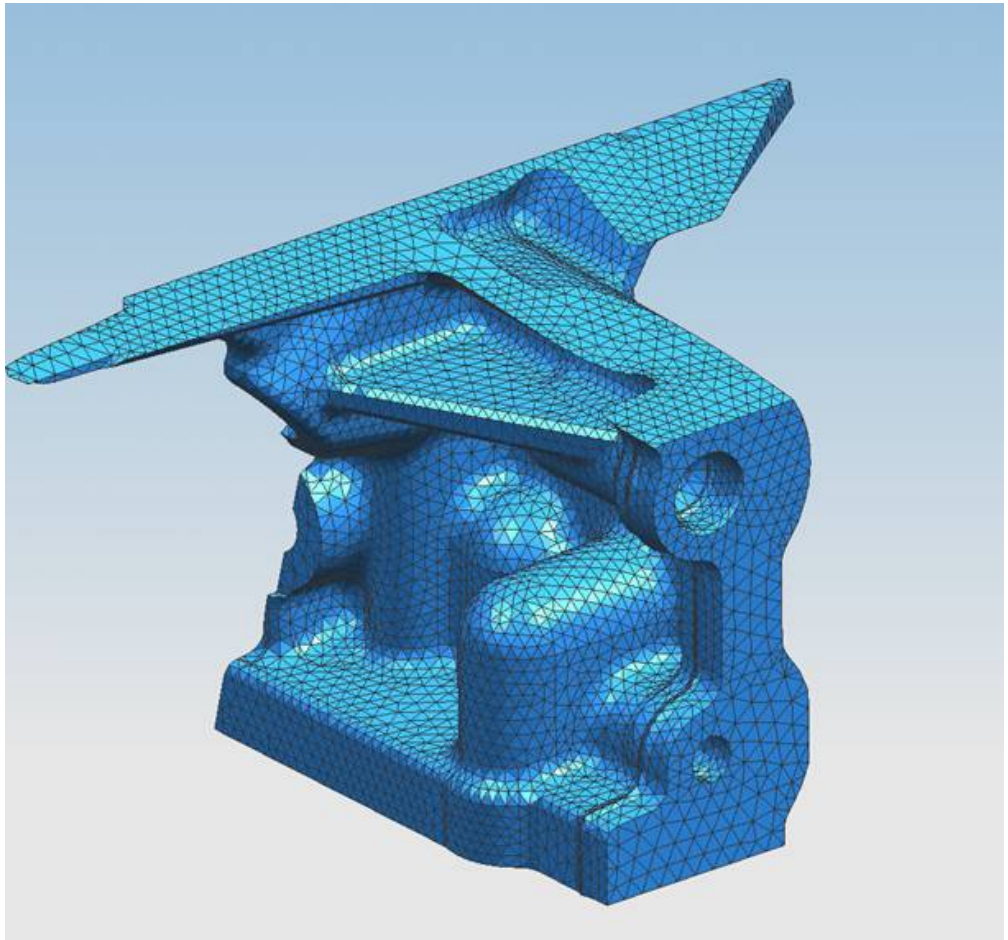

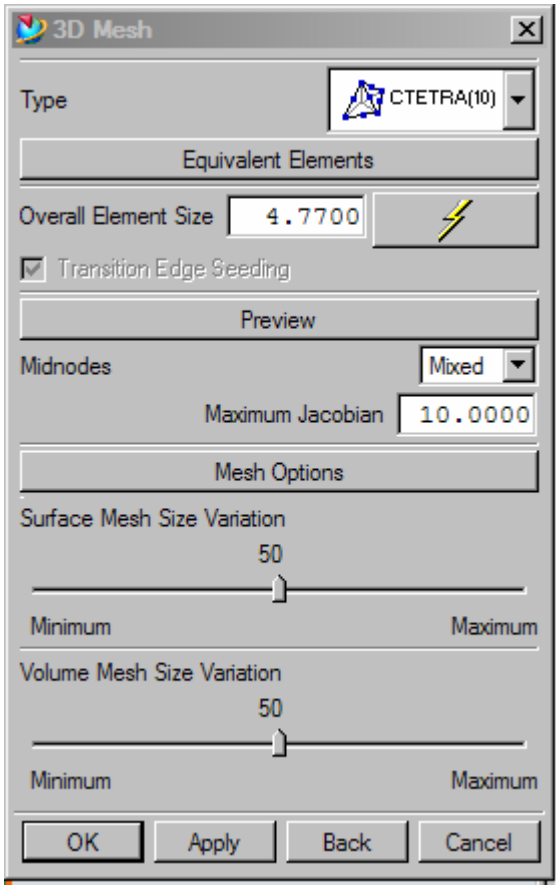

Meshing UI is context sensitive per selected solver

Highlights of NX 4 Strengths in Model Preparation

- “Coincident nodes” mesh mating
- MAYA’s automesh generation tool for Fluid boundary and domain mesh (interesting and promising new capability but may not be ready for prime time)

NX Nastran Flow Auto-mesh Generation on Flow Surfaces Creates Excellent Boundary Meshes

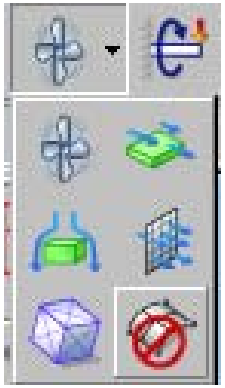

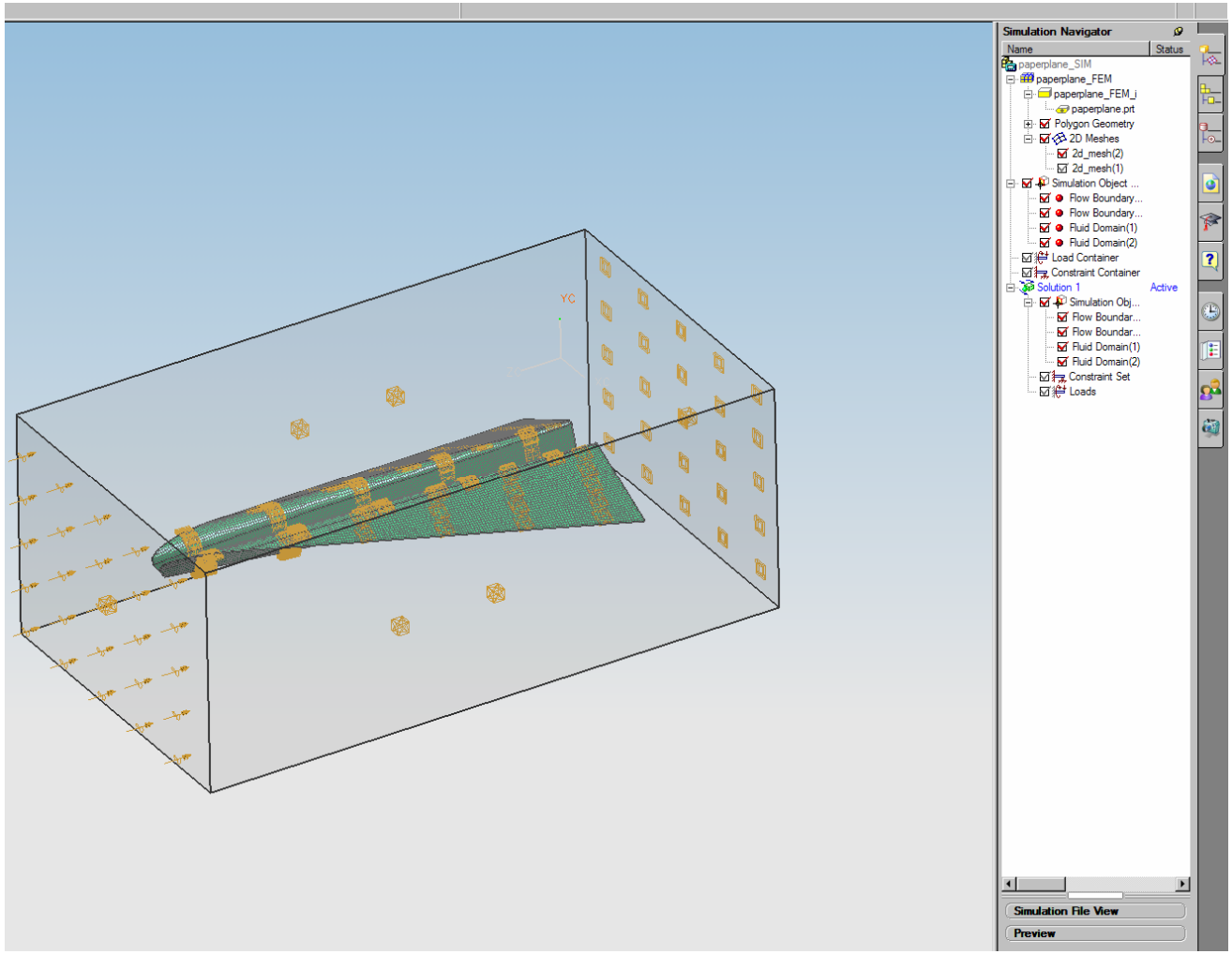

Highlights and Examples of NX 4 Strengths in Results Post-processing

- Report generation tool
- Iso-surface display

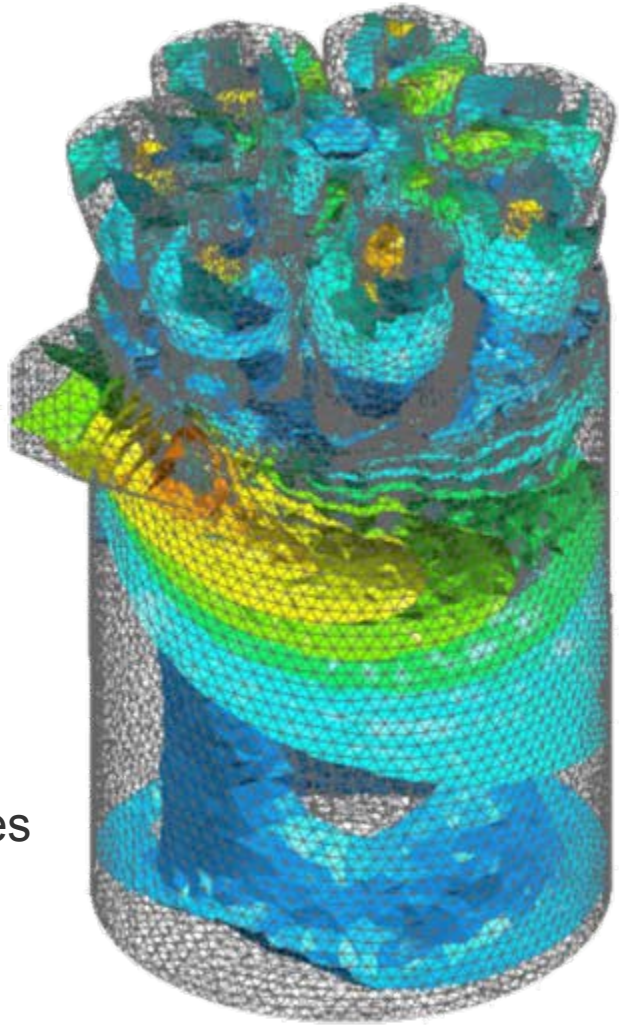

Constant velocity surfaces

I-deas CAE Features Not in NX 4

- Geometry Preparation
  - Create single part from assembly of instances
  - Partitioning resulting in non-manifold geometry – common adjacent surfaces
  - Geometry groups
- Mesh Generation
  - Manual nodes and elements manipulation
  - Mapped meshing & brick meshes
  - “Other” elements (has most element types but lacks user control)
  - FE entities groups
  - Assembly FEM
  - Laminate definitions and more robust material orientation

I-deas CAE Features Not in NX 4 (Cont'd)

- Model Preparation
  - Import/export of geometry with associated mesh
  - Universal file or text based neutral file import/export
- FEM Solve
  - Limited radiation analysis capability
  - Durability
  - Interactive response analysis
- Results Post-processing
  - Not as complete as I-deas
- General Usage
  - More user control in model abstraction and export
  - Units control and processing can be confusing

In Summary

- Geometry Preparation
  - NX 4 excels in geometry creation, healing and simplification
  - NX 4's inability to create I-deas like partition may be an issue
- Mesh Generation
  - NX 4 is a more robust tetrahedral element mesh generator for large models
  - NX 4 has an auto-mesher for boundary layers
  - NX 4 lack of user control for FEM entities can be a serious impediment
    - Cannot manually manipulate nodes and elements
    - Cannot explicitly define groups

In Summary (cont'd) …

- Model Preparation
  - Nastran element quality check is useful
  - Function Toolkit not complete
  - User control for FE model export can be improved
- FEM Solve
  - Similar to I-deas
- Results Post-processing
  - Report generation
  - Iso-surface display
  - Results display can be improved

Guidelines to Minimize the Pain of Transition

- Consider NX 4 if you need to…
  - Create new geometry
  - Clean up/simplify imported geometry
  - Generate mid-surfaces for stamped or sheet metal parts
  - Perform Nastran based element quality checks
  - Perform structural analysis of solid mesh dominant problems
  - Solve basic heat transfer and flow problems
- Otherwise, use I-deas 11 or 12
- Leverage NX 4 model export capabilities
  - CAD and Idealized parts (part, solid edge and parasolid files)
  - FEM and simulation models (Nastran bulk files)

A “Dual Use” Scenario

NX

- Modify
- Simplify
- Clean, Heal
- Idealize
- Mid-surface

- Abstraction (polygonal)
- Tet mesh
- 2-D mesh seed

- Solution Setup
- Nastran Quality Checks

- Structural
- Basic Heat Transfer/Flow

- Report Generation
- Iso-surface
- JT files

Dual Licensing

Geometry Preparation → Mesh Generation → Model Preparation → FEM Solve → Results Post-Processing

UGS parts
Solid edge
parasolid

Nastran
Input File

Nastran
Input File

Nastran
Input File

I-deas

Strategy for Transition

- Minimum Transition or “Safe” Approach
  - Use NX 4 for most if not all geometry work
    - Leverage excellent geometry creation, modification and healing capabilities
    - Exception: may reconsider if I-deas type partitioning is required
  - Use NX 4 to model and analyze structures that require extensive tetrahedral meshes
  - Export model and complete remaining tasks in I-deas

This approach leverages dual licensing to utilize both NX 4 and I-deas strengths to minimize transition risks

Strategy for Transition (cont'd)

- Maximum Exposure Approach
  - Use NX 4 for capabilities that are either on par or better than I-deas
  - A pathfinder approach to better prepare for the eventual complete transition to NX
- Optimum Plan
  - Most projects to use the "safe" approach
  - Low criticality or research/development work to use the "maximum exposure" approach

Dual licensing greatly enhance transitional flexibility and expand training opportunities

Your Thoughts ….

- Other transitions issues to consider
- Your experience with the NX, CAD and Simulation
- Your timing
- Your motivations