Quick & Clean

Author: Gili Omri

Company: Land Systems - Technion

Email: omrig@tx.technion.ac.il

Phone: +972(04)829 2805

Premium Partners:

Unit Profile:

- Paper to Prototype - R&D Unit.
  - Multi-Disciplinary
    mechanical, hydraulic, control…
  - Multi Tasking
- Project size:
  - One man jobs
  - Large scale
    - Thousands of items
    - Partners & subcontractors
- Human resources:

  12 - Engineers.

  6 - Technicians & Practical engineers.

  4 – Management.

Mine Flail

- Power Pack
- Drive train
- Hydraulics
- Heat exchange
- Control

- Soil Mechanics
- Metallurgy
- Human engineering
- Manufacturing
- Integration

Model wind turbine

- Aerodynamics
- Aeroelasticity
- Vibration
- Data acquisition
- Mechanisms
- Control
- Mechanical Design
- Manufacturing

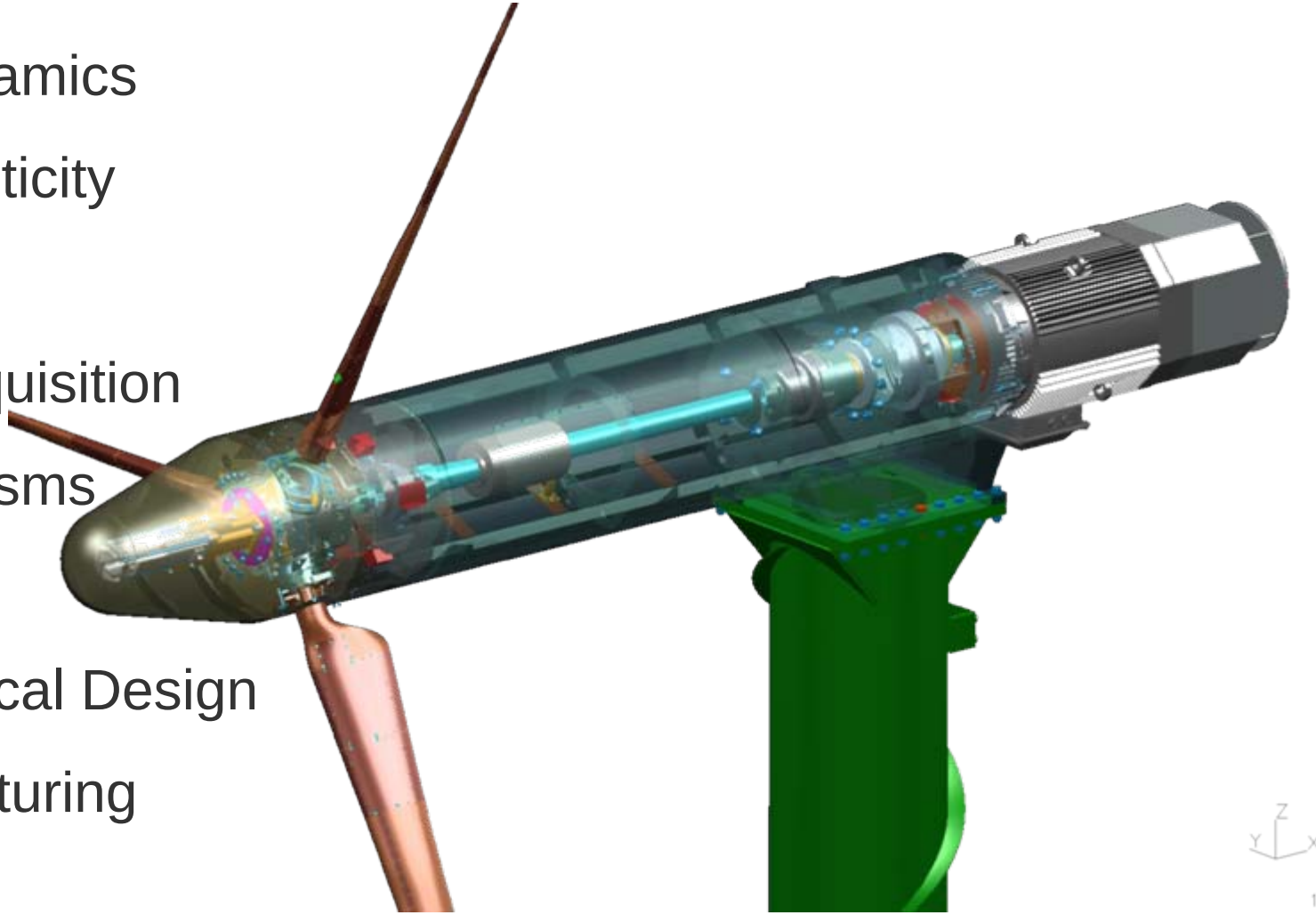

Abstract

Selected methods we use with I-DEAS
to get the job done

Quick & Clean

Murphy works overtime!!!

- Concurrent Engineering environment.
- Avoiding unwanted behavior of Part / Assembly.
  - Bullet proof assembly constraining.
  - Water tight parts
- Speedup Assembly constriction.
  - Reflection sets.
  - Part equations.
  - AC.

Environment & Startup

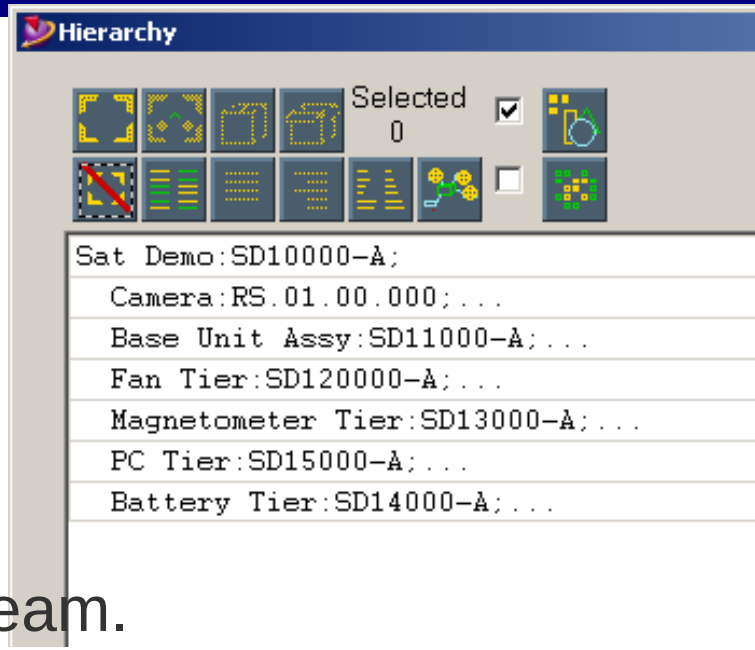

- Data controlled environment.
  - Configured Project template.
  - Aligning States and roles.
- Skeleton assembly
  - Hierarchy & Numbering scheme.
  - Catalogs & get items defined.
- Assembly branches assigned to Team.

  Concurrent engineering.

  (down to single part breakdown – part components).
- Assembly structure will definitely change!
  - Reparenting – not necessarily renumbering
  - Split add or remove branches

Why do things go astray?

Why do computers do what they are told?

Rather then what we want them to do?

Water tight part construction

- Use BORN approach.
- follow design intent.
  - Position
  - Dimension
  - Geometric constraints (quick & clean)
- Wireframe - Blue it or Blow it!!!
- When it goes wrong – Think

  (it will happen again)

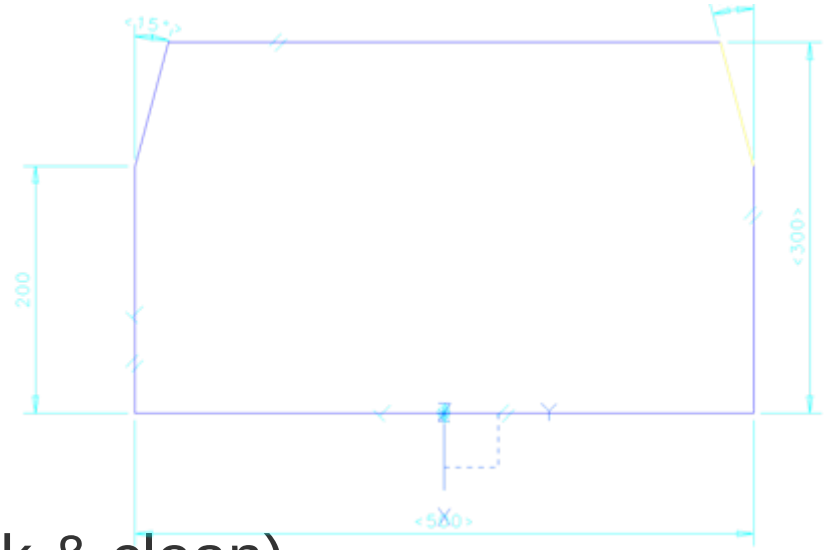

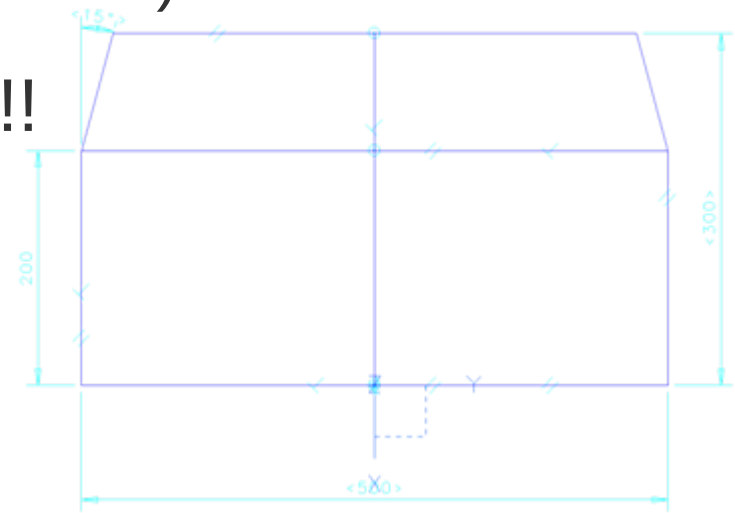

Part Equations

- Excellent for parameter ruled geometry (do not forget |units|)
- I-DEAS Part Equations are embedded (Excel is not linked!!!)
- Allows Ref Dimension to drive equations (make them from equation)
- Always create Equations where needed recommended location - top node!!!
- To add Notes - The secret sign is? //

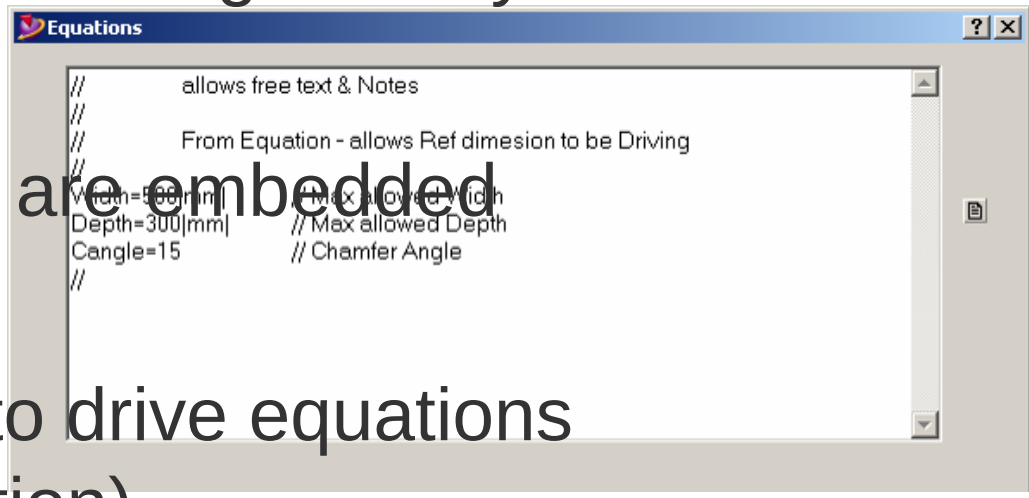

Part equations

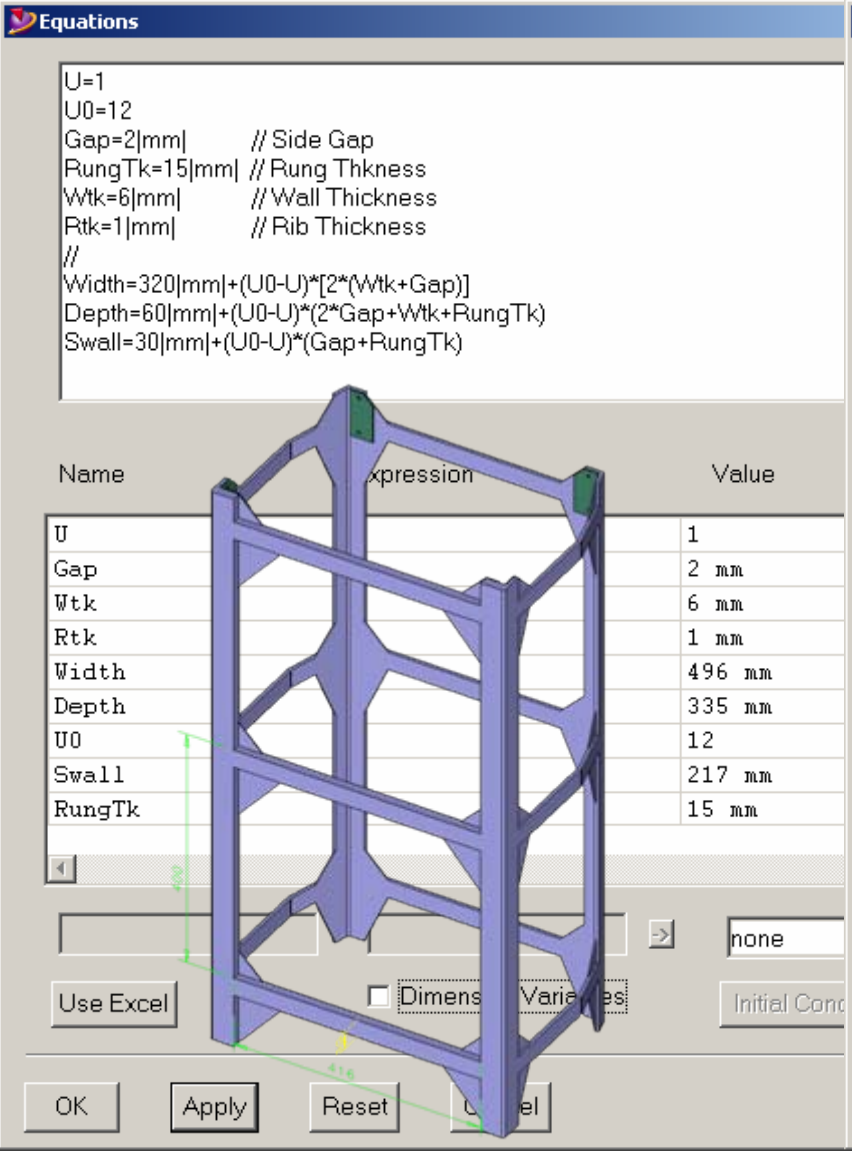

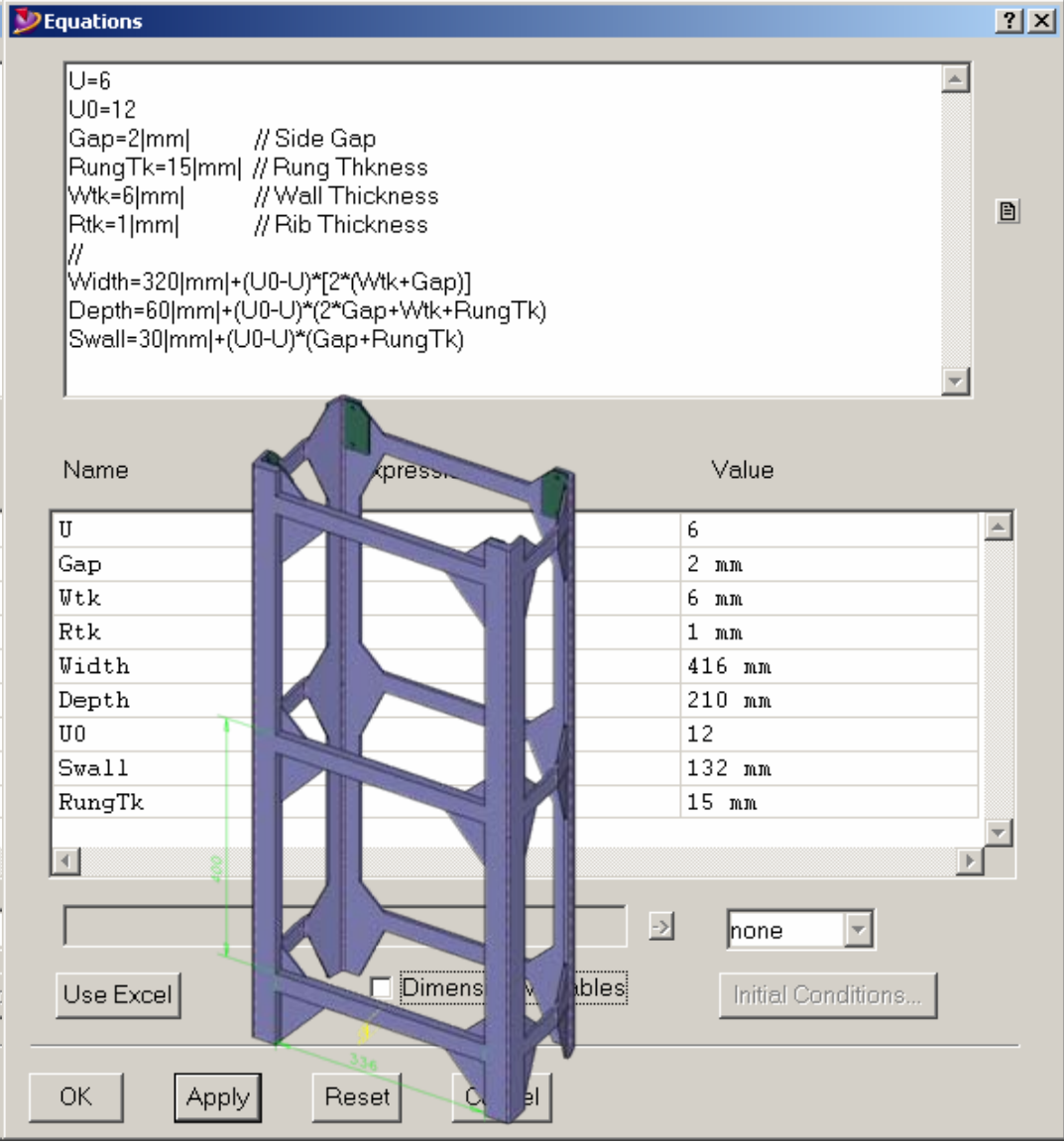

Assembly constraints

There are six degrees of freedom

- Although I-DEAS handles over constraining…
  - A chain is as strong as its weakest link.
  - Constrain **your** choices, not the **software.**
- Follow the 3-2-1 rule (or 4-1-1)
  - Follow design intent.
  - Start from the top.

It takes time,

But much less then debugging

Which always happens at the worst time

Assembly reference geometry

- Save on part modifications.
- Work with Ref \ JT Parts.

  (You can create an assembly-owned reference point, line, or plane that tracks a JT/faceted instance)
- Select the appropriate owner.
- Distinguish Assembly Reference CS

  (Size & font).

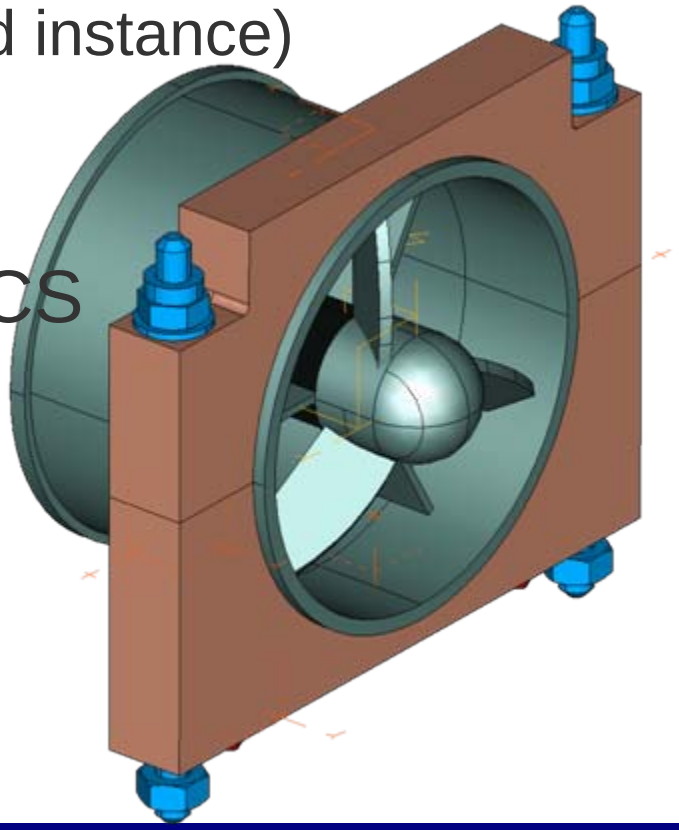

Reflection sets

- Consolidate sets to reflection planes
- Set common team practices
  - Reflection direction
  - Reflection set name (even running a one man show)
- Non associative reflect is a constraint
  - Utilizing Reflection plane & Part ORIGIN
  - BORN is aligned with Part ORIGIN (It’s nice to be BORN)

AC – Capture manufacturing stages
Keep ALL product items under ONE Parent

- Keep ALL product items under ONE Parent
- You can work both ways:
  - Rollback & AC from current history node
  - AC the initial state & detail the part

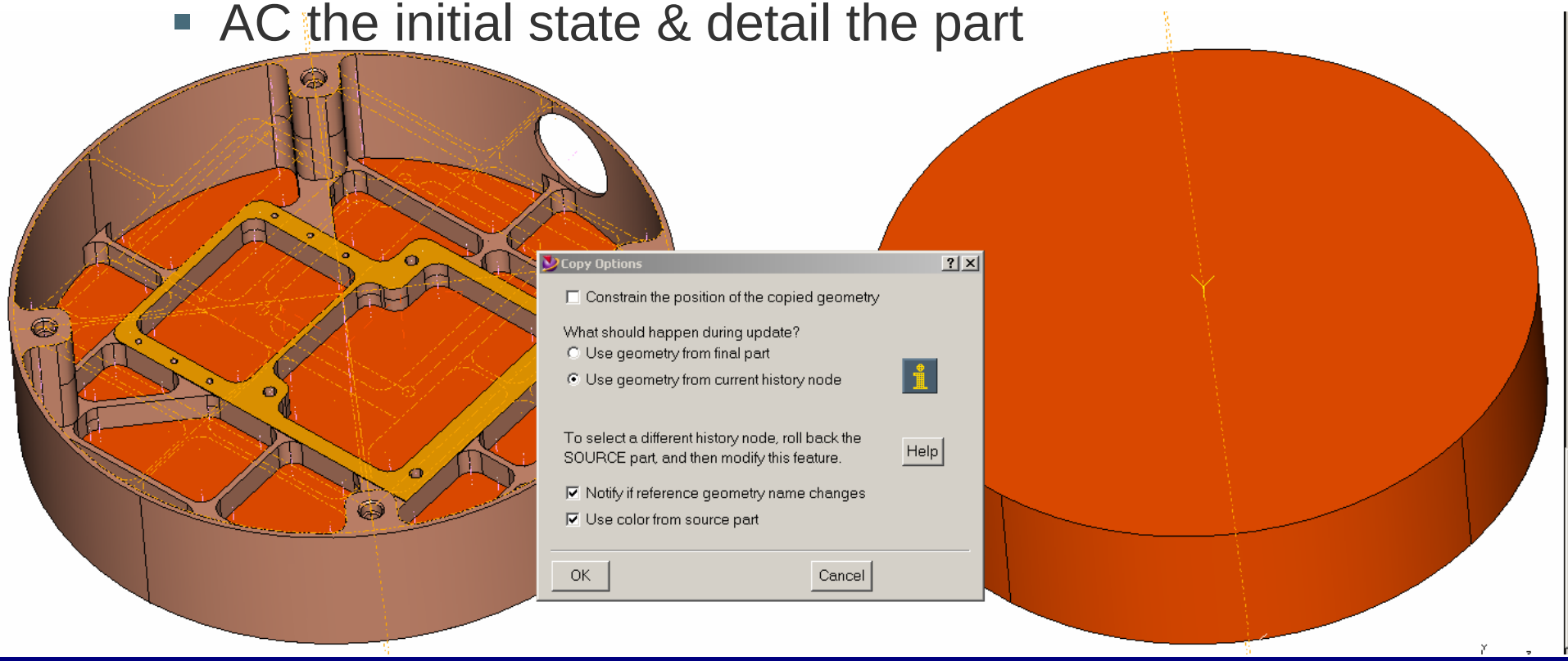

AC Bonus – Harness & Tubing

- Wire harness is needed for assembly
  (harness design task Not necessary)
- AC edge surfaces & trough points to connector
  (place harness in appropriate assembly level)
- Use 3D spline (r2c3) to route
- Attach spline to part (r1c3)
- Use Shape Design (r4c1)
  (to manipulate 3D spline)
- Sweep section along path
  (you need the part out not the instance)

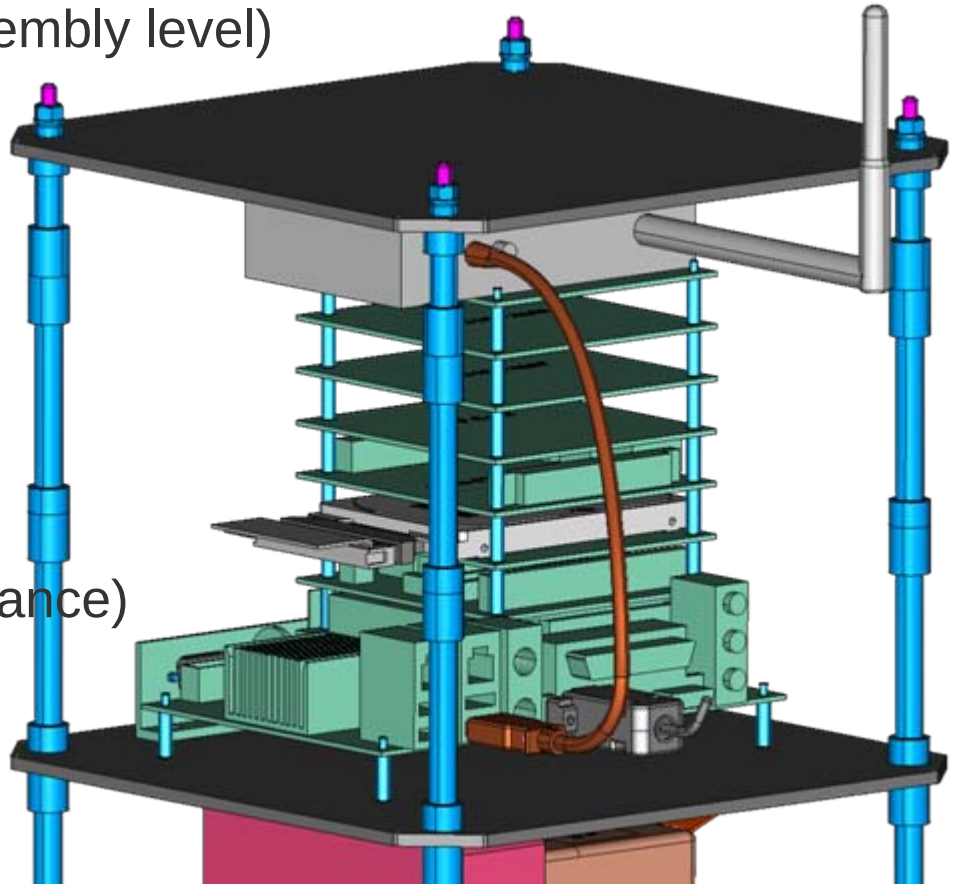

Quick & Clean
Murphy works Overtime

If anything can go wrong, it will

If there is a possibility of several things going wrong, the one that will cause the most damage will be the one to go wrong

If anything just cannot go wrong, it will anyway

Left to themselves, things tend to go from bad to worse

If everything seems to be going well, you have obviously overlooked something