3D Dimensional Management Technology & Process

Norm Crawford

Geometric Solutions

Director South Region and Engineering Manager

GDTP S-0386

NCrawford@GeometricSolutions.net

740-333-4568

Premium Partners:

WALTONEN ENGINEERING, INC

MECHANICAL DESIGN & ENGINEERING SERVICES

AUTOMATION SOLUTIONS

MANUFACTURING FACILITY & PROCESS PLANNING

ENGINEERING SUPPORT SERVICES

For More Information
Visit Our Web Site:
www.waltonen.com

Since 1957

Headquarters,
Warren, MI
(586) 274-2300

Southeast Region,
Greenville, SC
(864) 989-0620

Turn-key Systems
Facility, Centerline, MI
(586) 274-2300

GEOMETRIC SOLUTIONS

WALTONEN ENGINEERING

Geometric Solutions, LLC
Dimensional Management, Visual Collaboration, PDM

TSV

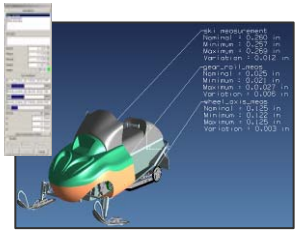

NX Tolerance Analysis

Vis VSA

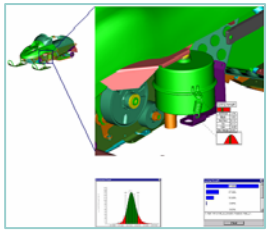

CAD-Neutral Tolerance Analysis

Vis Quality

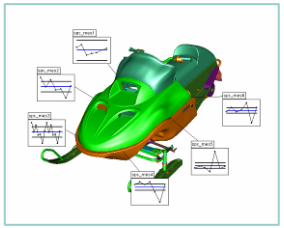

CAD-Neutral Quality Data Viewing

Vis Publish

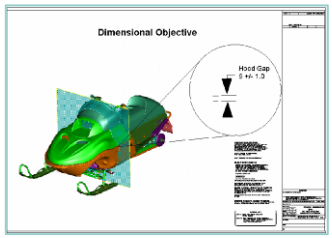

CAD-Neutral Quality Documentation

Community

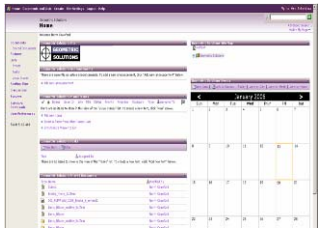

Quality Communication

Services

Training & Technology Transfers

Dimensional Management:

Assembly Tolerance Engineering to Produce World Class Quality at a World Class Price, First !

GEOMETRIC SOLUTIONS

WALTONEN ENGINEERING

Dimensional Management Technology and Process Track

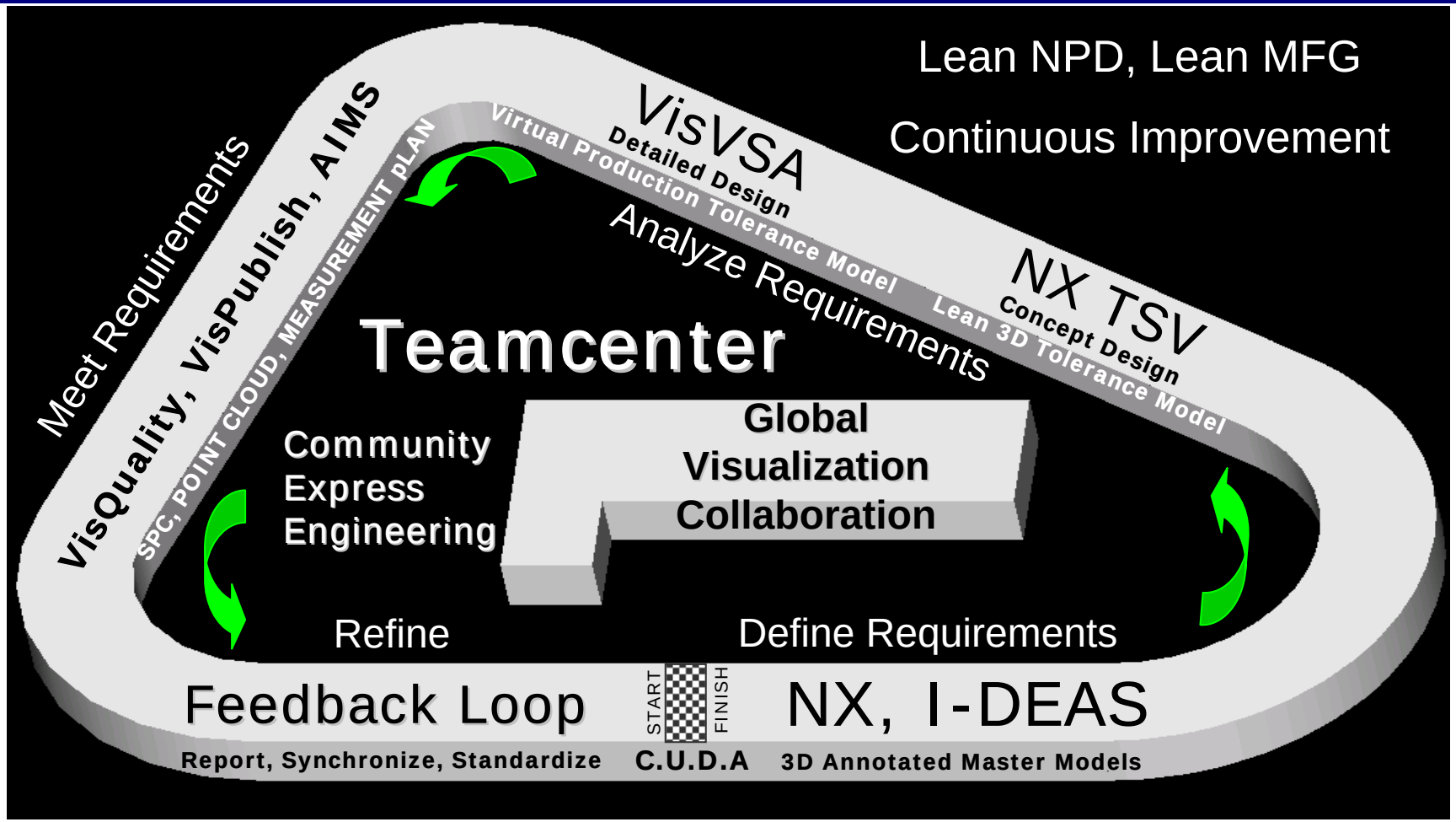

Communicate, Understand, Decide, Act

GEOMETRIC SOLUTIONS

WALTONEN ENGINEERING

Benefits of 3D Annotation on Models
Part of a Lean Product Development Process

- Easier & Faster to Read then 2D
  - Reduce misinterpretations
  - Reduce hours of discussions trying to understand
  - Ability to Filter and Search for Specific Annotation (Datums, Delta Notes)
- Better Association to Model then 2D
- Fewer Files & File Types to Manage, Search, Associate, Translate, and Migrate
- Faster Dimensioning & Tolerancing
  - Eliminate Repetitive Symbols in Various Views
  - Reduce or Eliminate Basic Dimensions
  - Syntax (I-DEAS) and Rule Checking (NX) on GD&T
- Downstream Processes
  - TSV (NX4) for initial analysis: Tolerance and “Design” Refinement
  - TSV Direct Import to VisVSA
  - Direct Import to Measurement Planning and Inspection Products
  - Development of direct import of feature requirements into Manufacturing Software continues

3D GD&T & Annotation (I-DEAS)
More Information in One Place
But how is it easier to read?

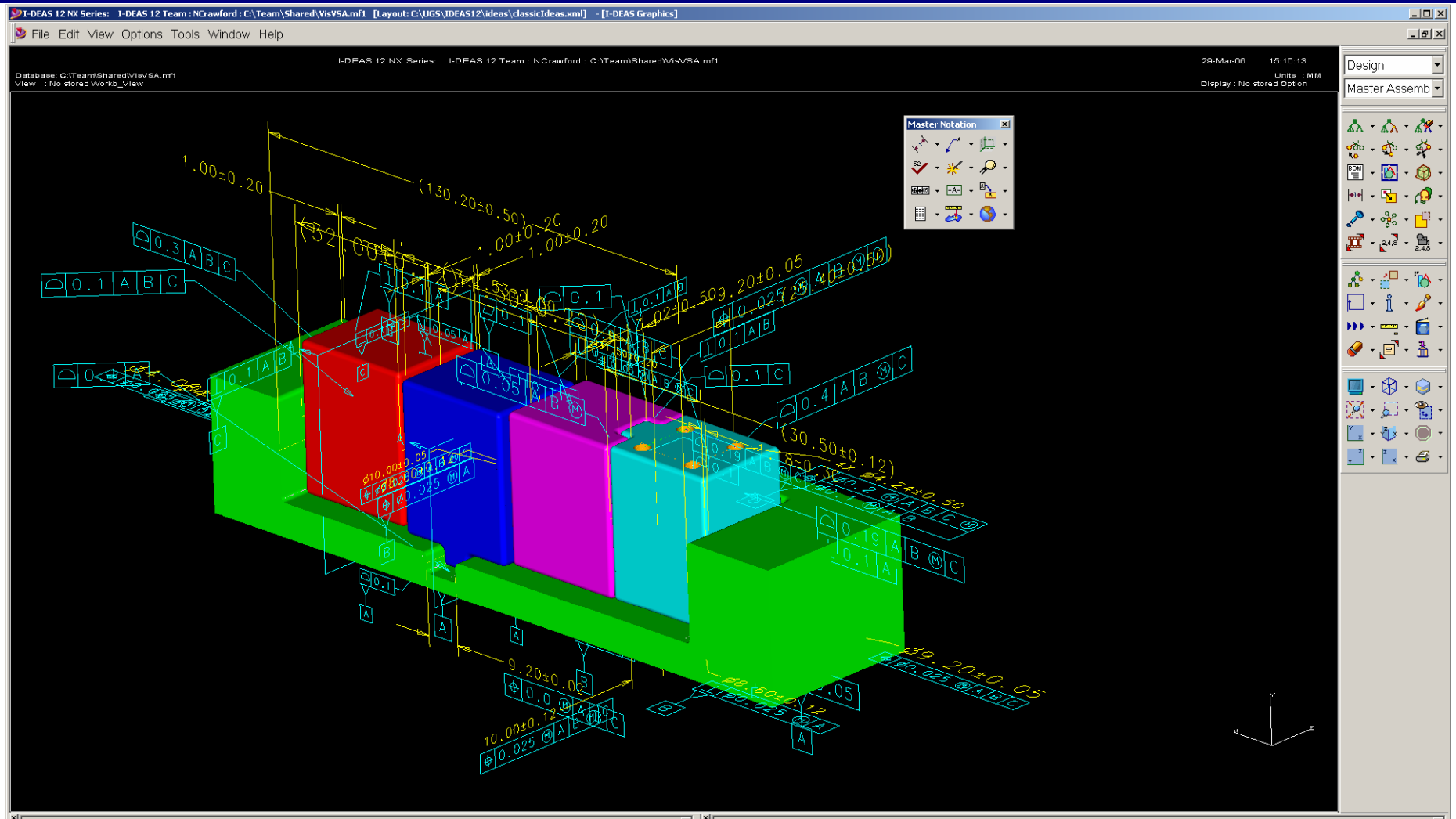

GEOMETRIC SOLUTIONS

WALTONEN ENGINEERING

I-DEAS Assembly Model Views
ASME Y14.41 Display Management

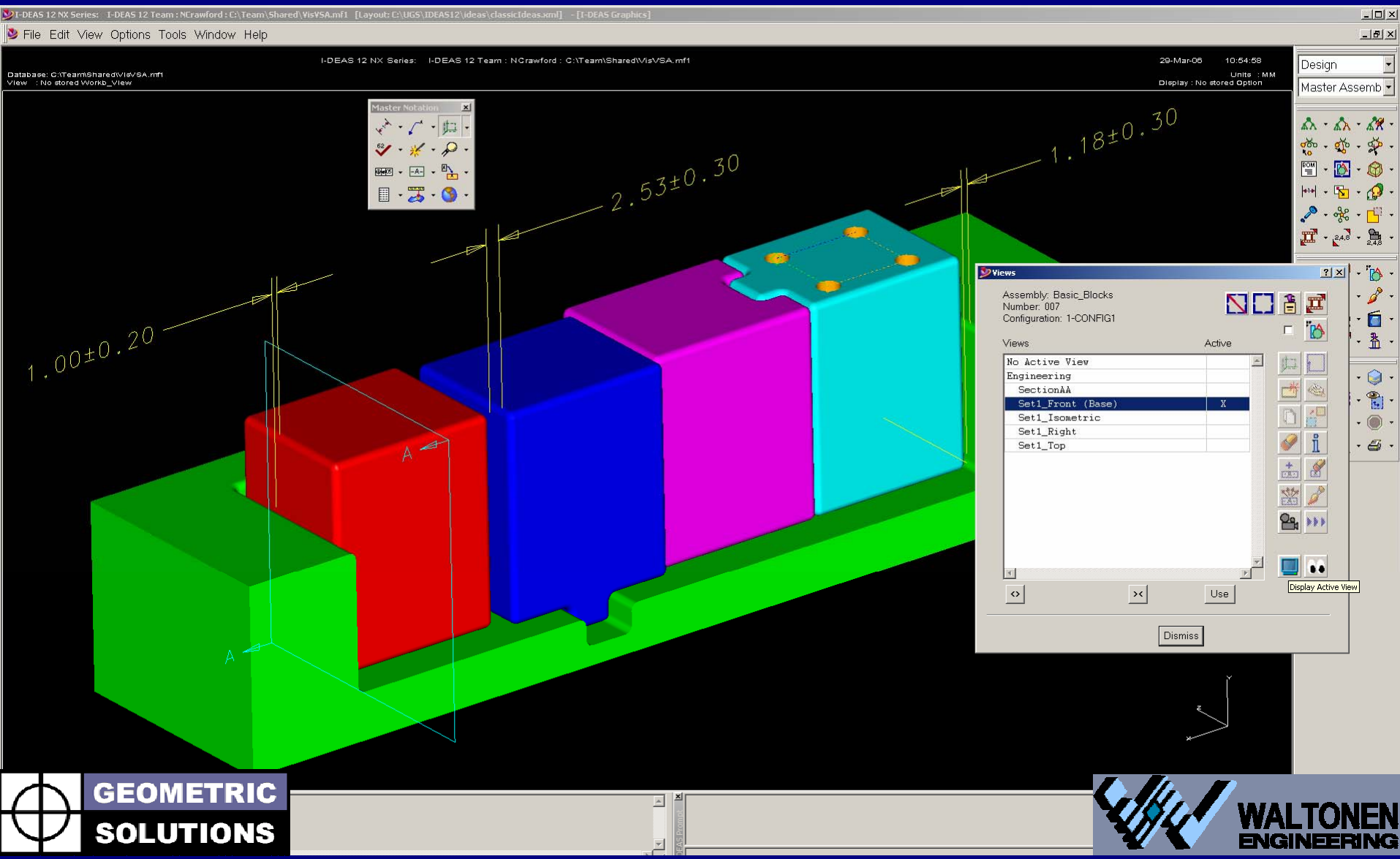

GEOMETRIC SOLUTIONS

WALTONEN ENGINEERING

I-DEAS Assembly Front Model View Display Management

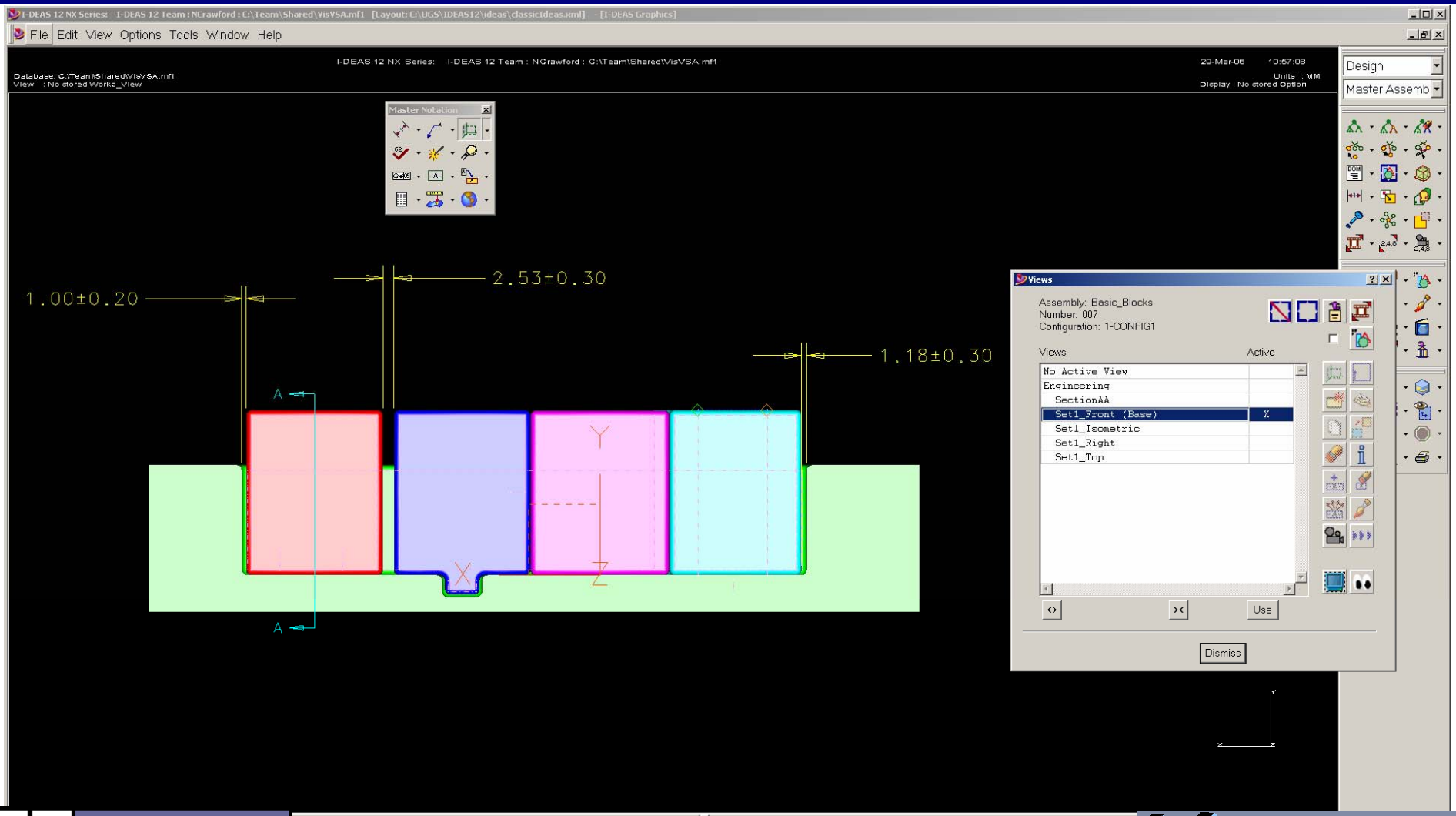

GEOMETRIC SOLUTIONS

WALTONEN ENGINEERING

I-DEAS Assembly Section Model View

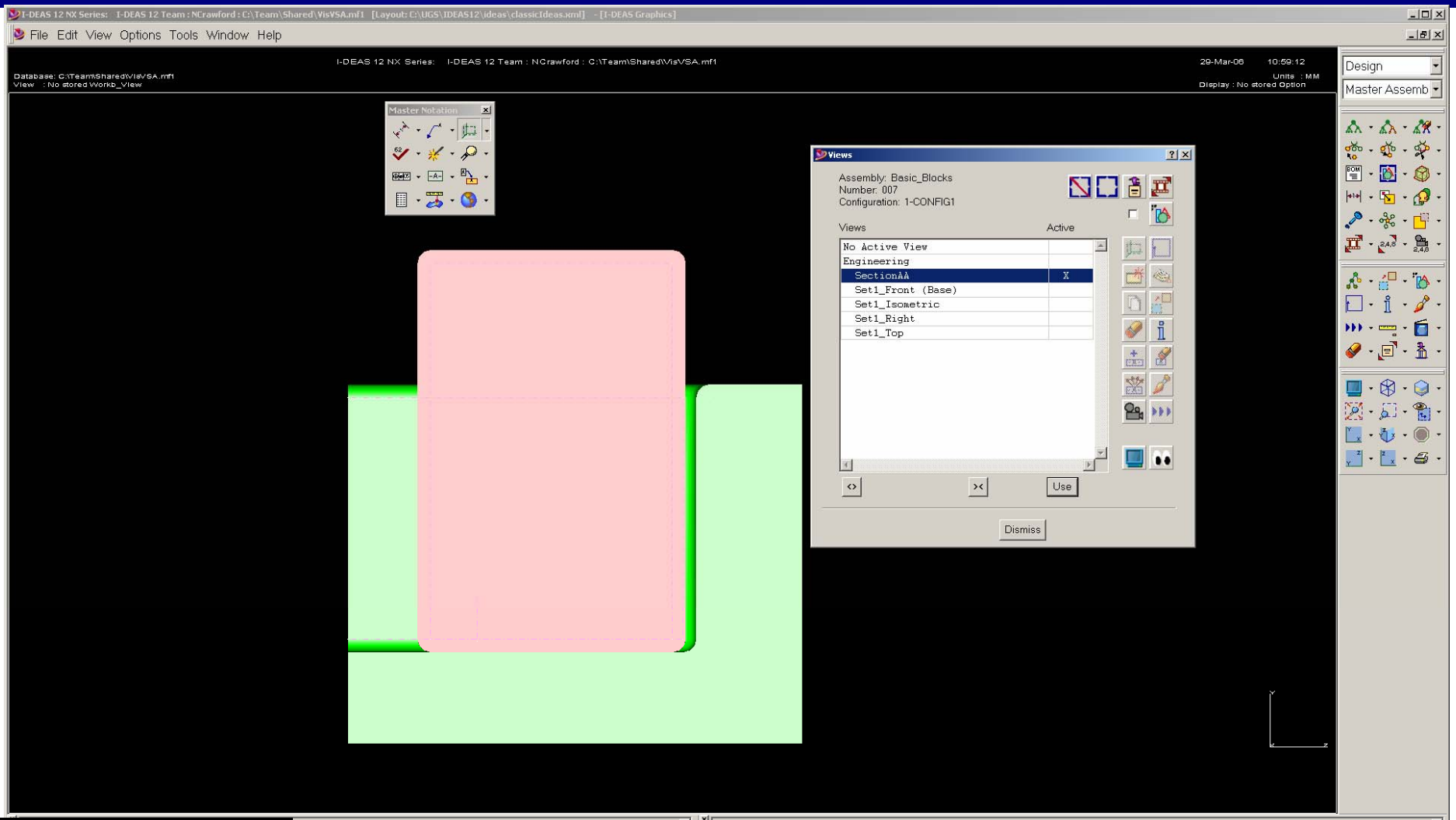

GEOMETRIC SOLUTIONS

WALTONEN ENGINEERING

Improved Visibility
Using 3D Section versus 2D

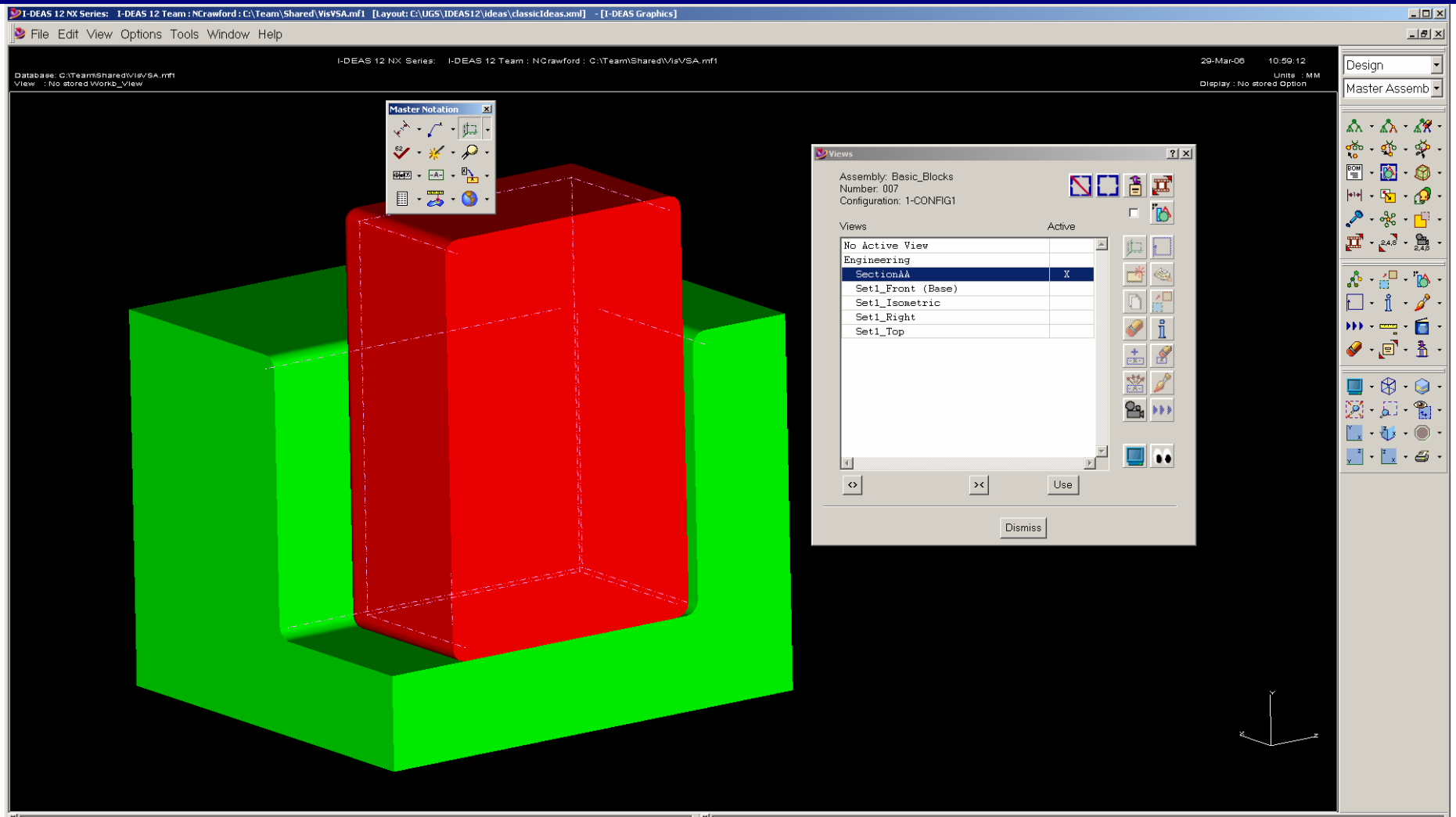

GEOMETRIC SOLUTIONS

WALTONEN ENGINEERING

I-DEAS Has Unique Text Display Correction Using Simple Refresh after Dynamic Rotations

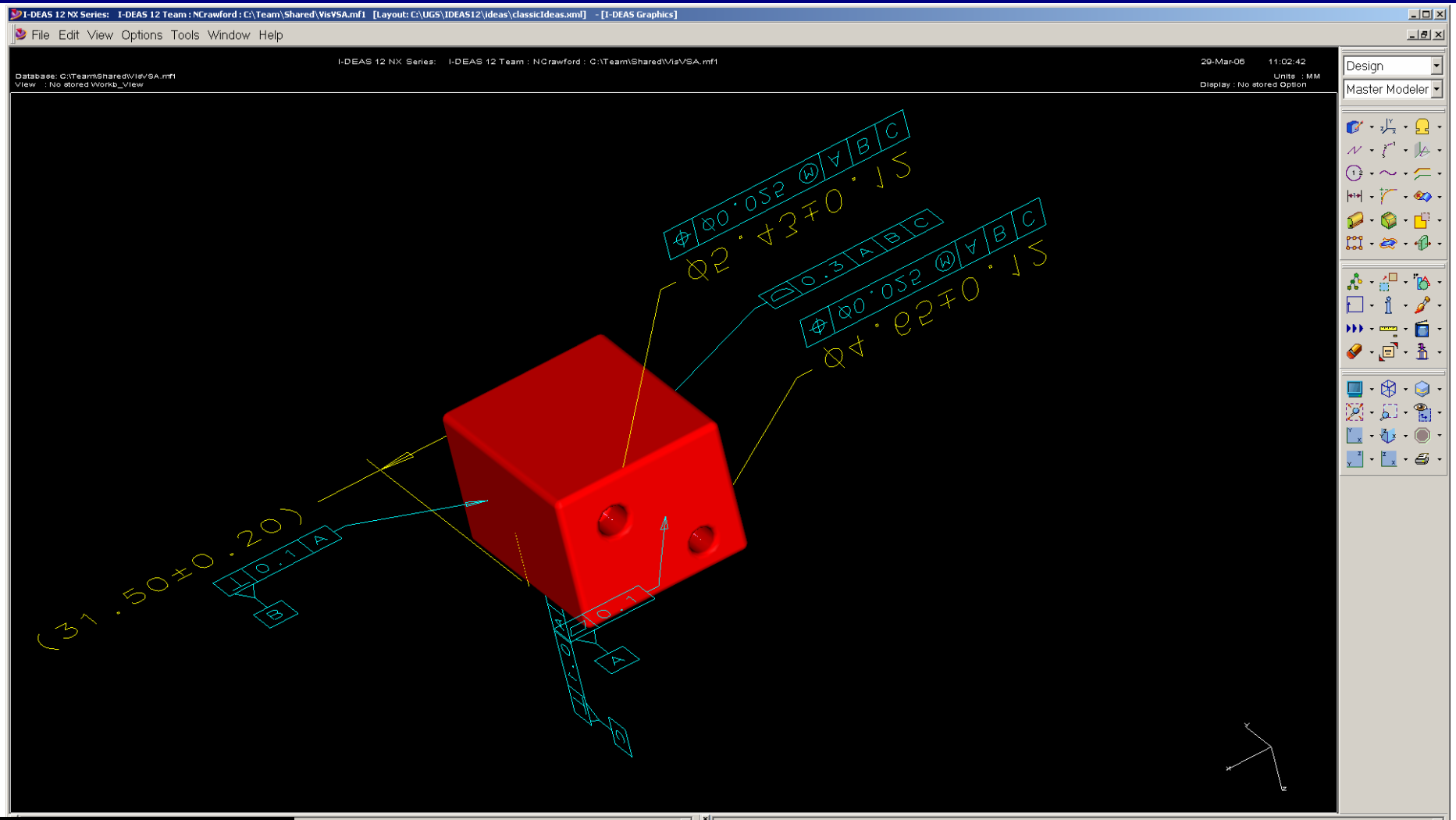

Text Display Corrected after Refresh

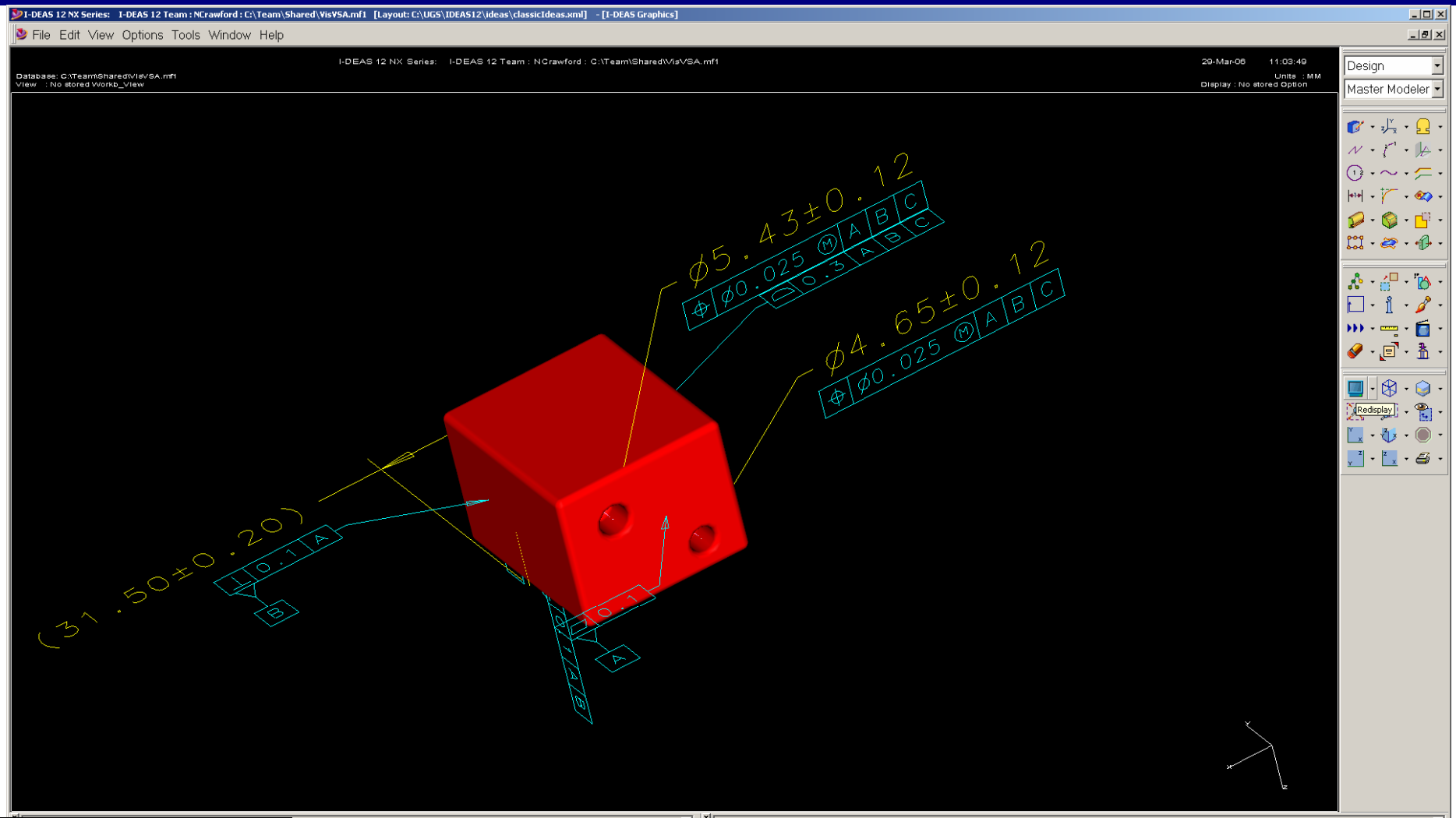

GEOMETRIC SOLUTIONS

WALTONEN ENGINEERING

Besides Simple Rotation
Options to Display Hidden Features

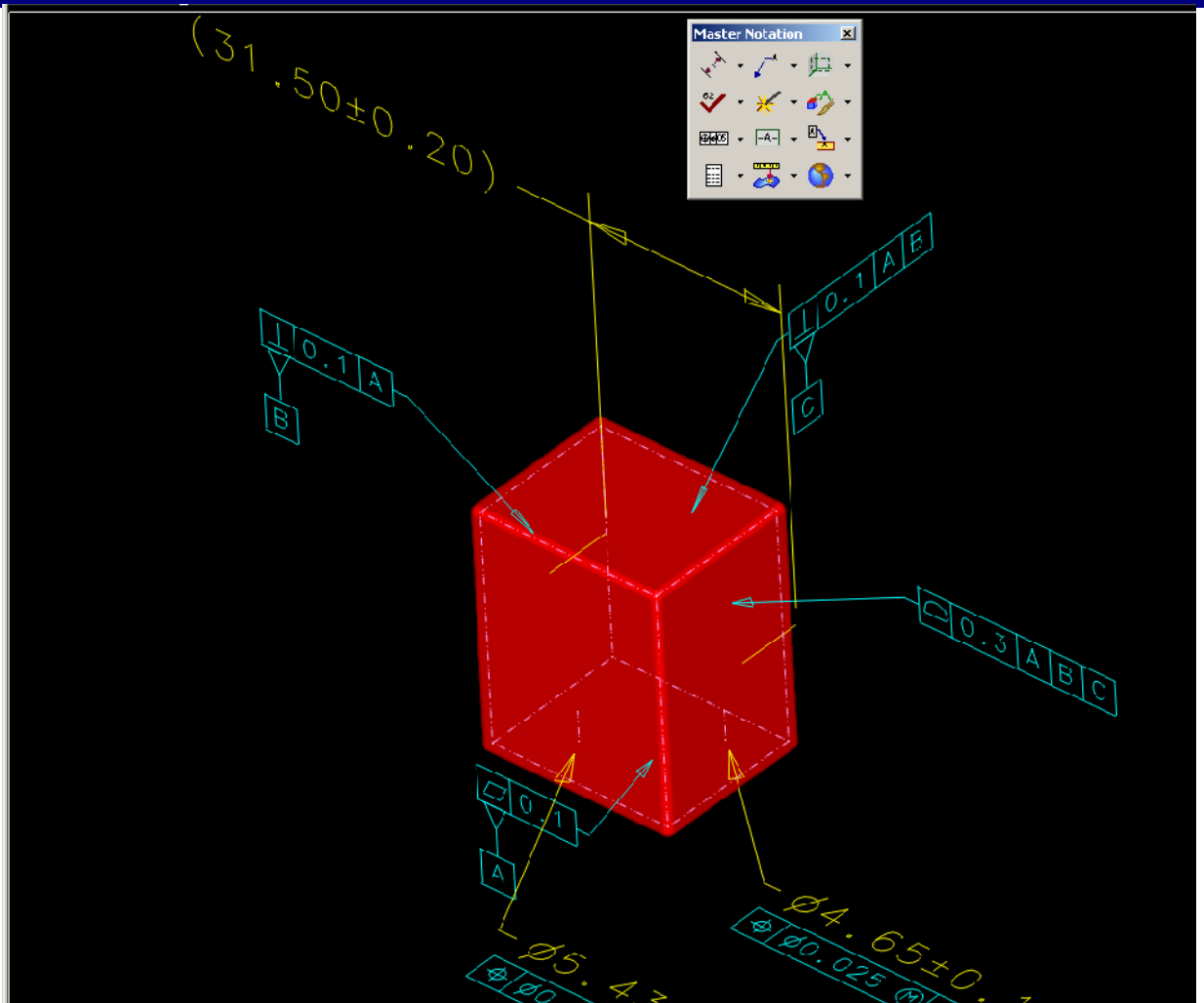

GEOMETRIC SOLUTIONS

WALTONEN ENGINEERING

For Example:
Simple Switch to Wireframe for Hidden Features

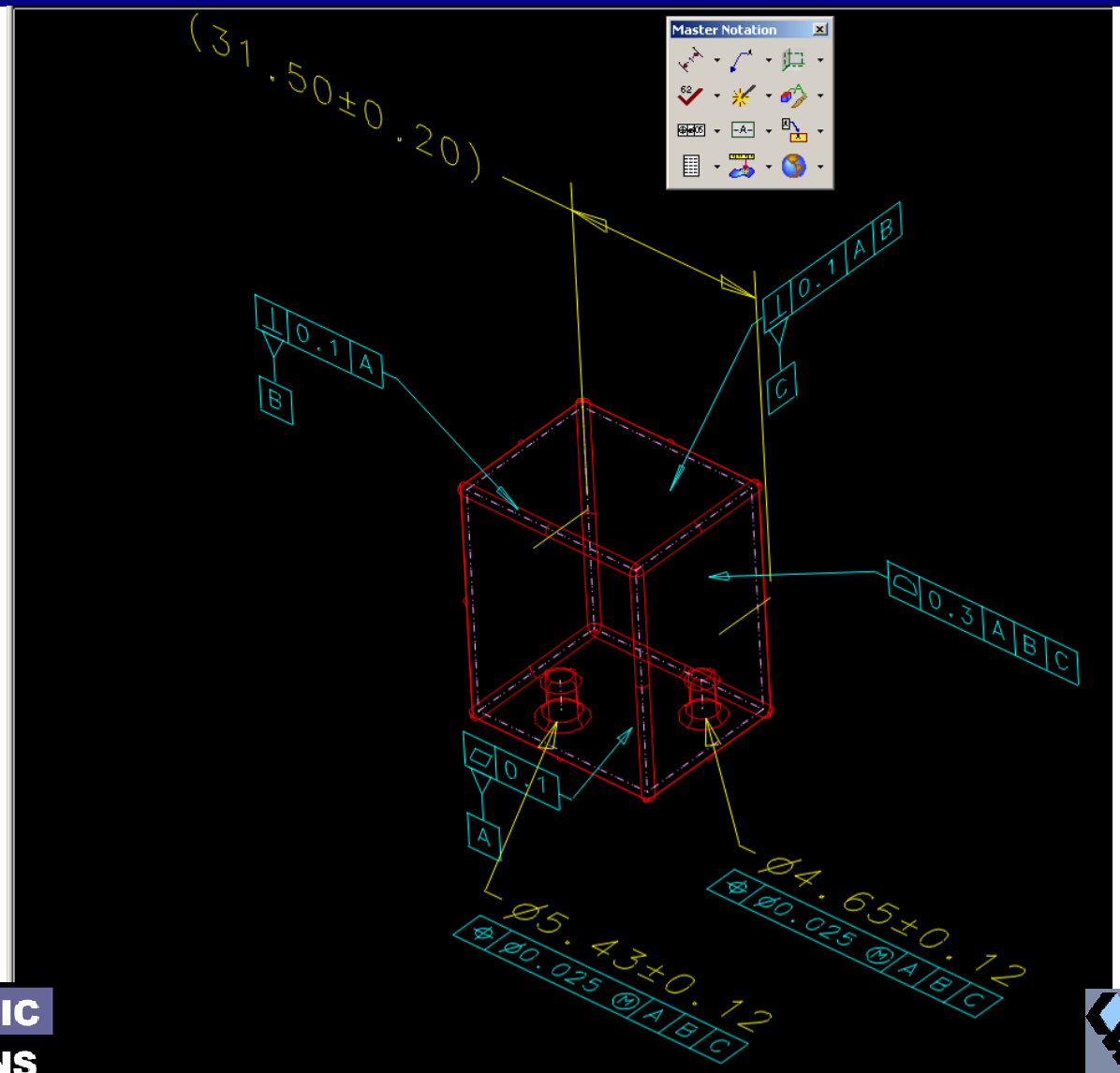

GEOMETRIC SOLUTIONS

WALTONEN ENGINEERING

Another Example:
Simple PMI Query (ASME Y14.41)

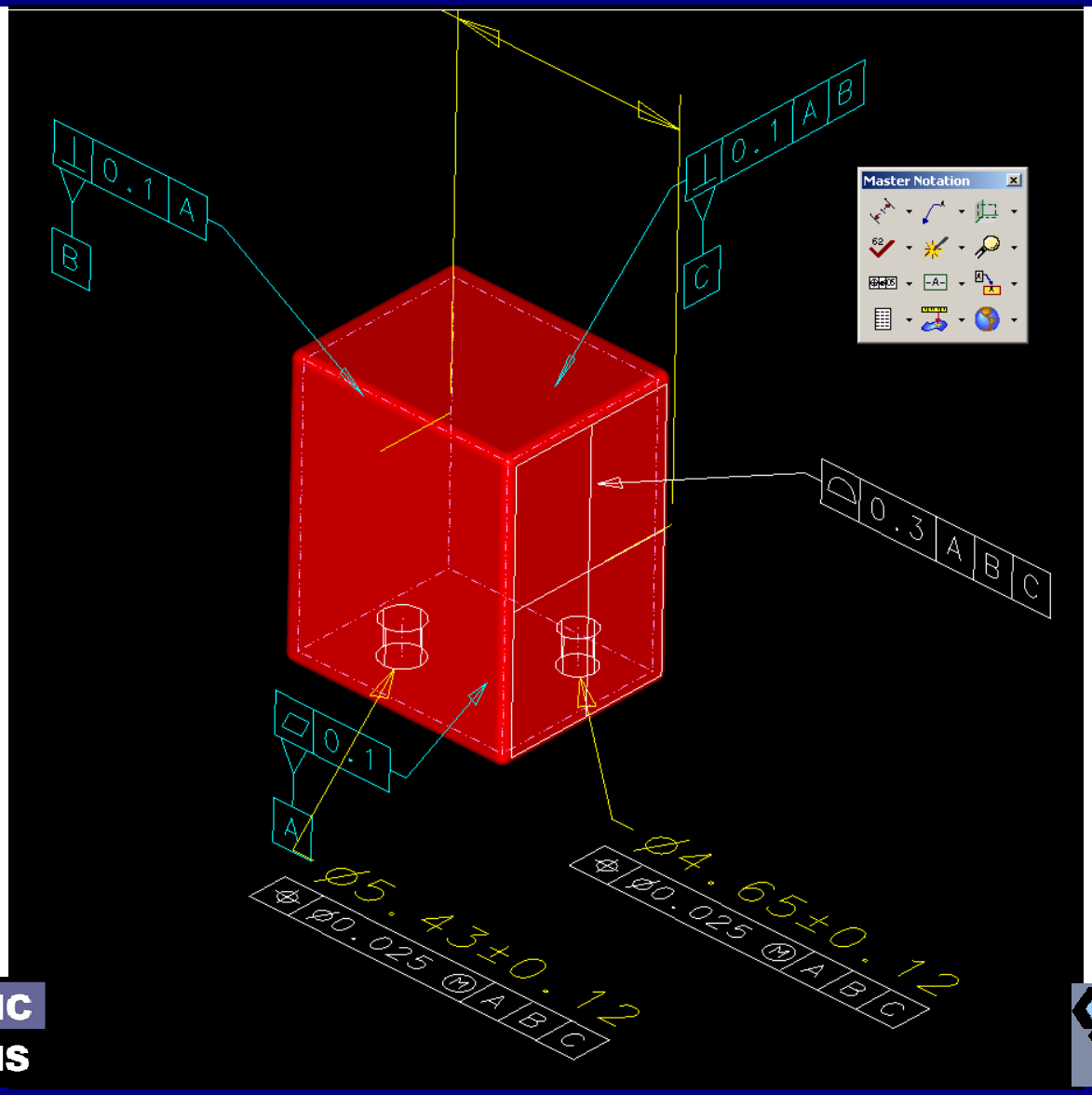

GEOMETRIC SOLUTIONS

WALTONEN ENGINEERING

Simple Part Model Views
Usable downstream in 2D and JT

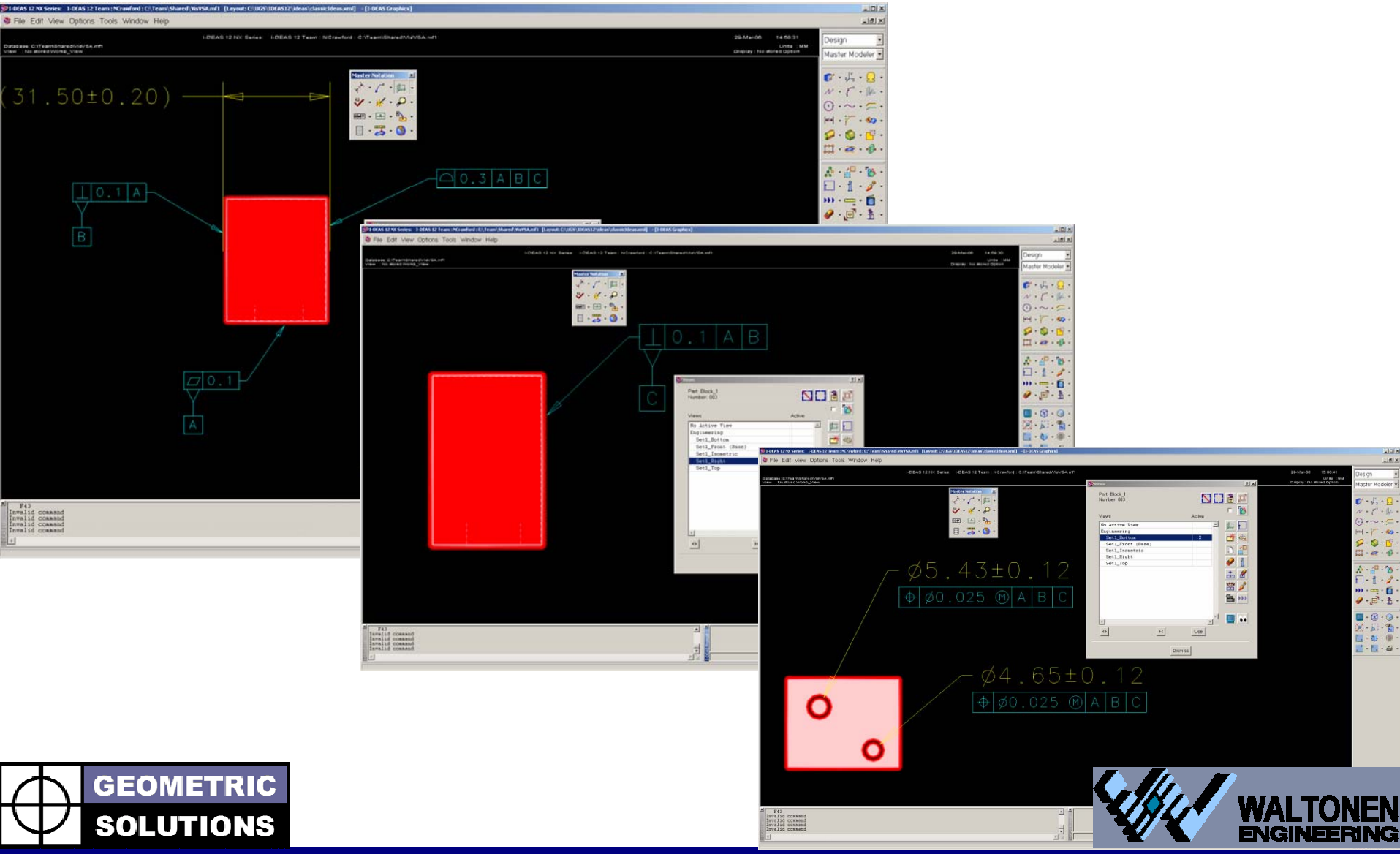

GEOMETRIC SOLUTIONS

WALTONEN ENGINEERING

User Attributes:
An Option to 3D Notes / Text
Also Viewable in JT Format

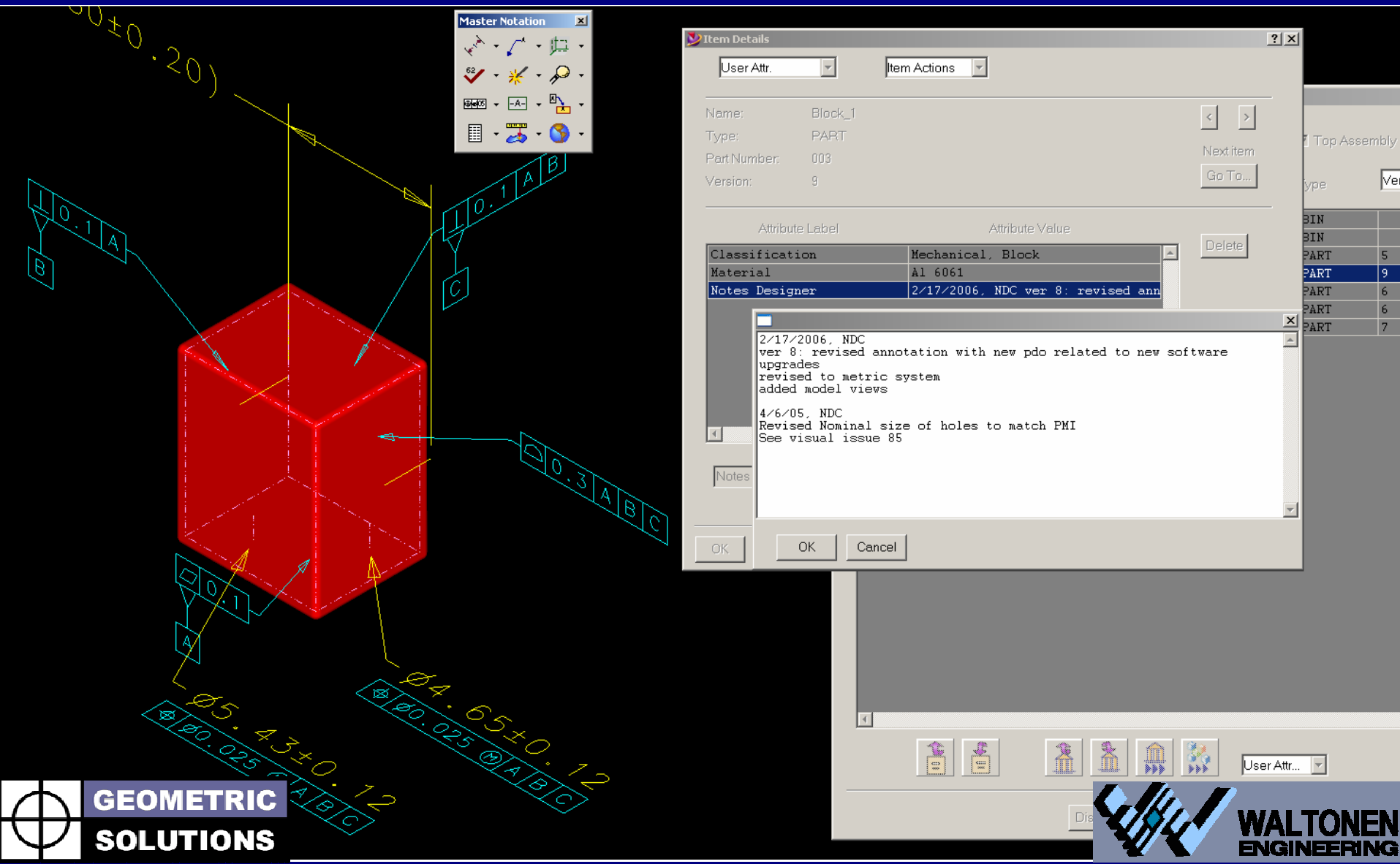

GEOMETRIC SOLUTIONS

WALTONEN ENGINEERING

JT Model View
Perfectly Clear and Easy to Read, Right?

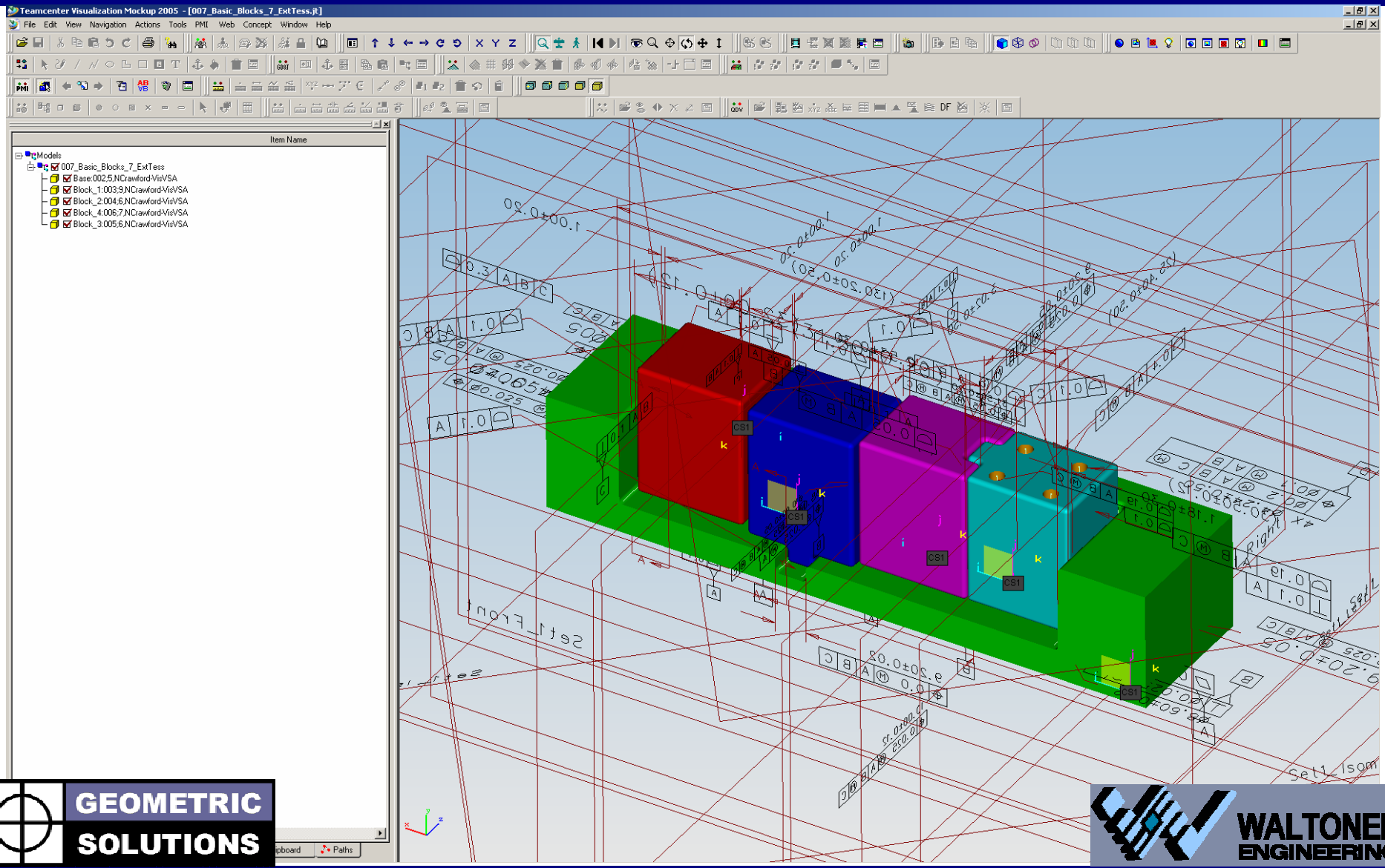

GEOMETRIC SOLUTIONS

WALTONEN ENGINEERING

Right ! I-DEAS Model Views Available in JT PMI Functionality

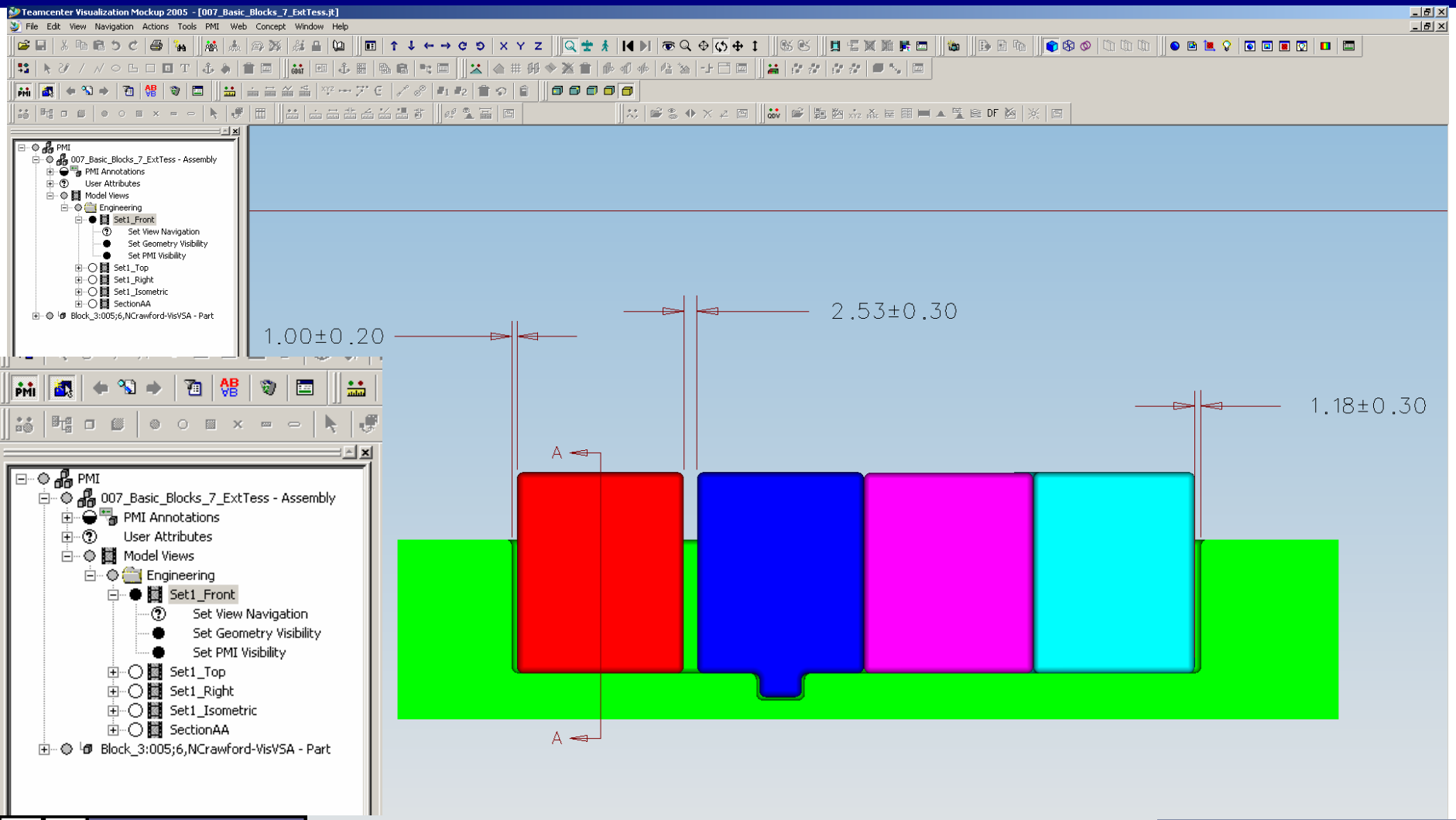

GEOMETRIC SOLUTIONS

WALTONEN ENGINEERING

Select Any One Part within Assembly Have Immediate Access to PMI Hierarchy & Individual Part Model Views

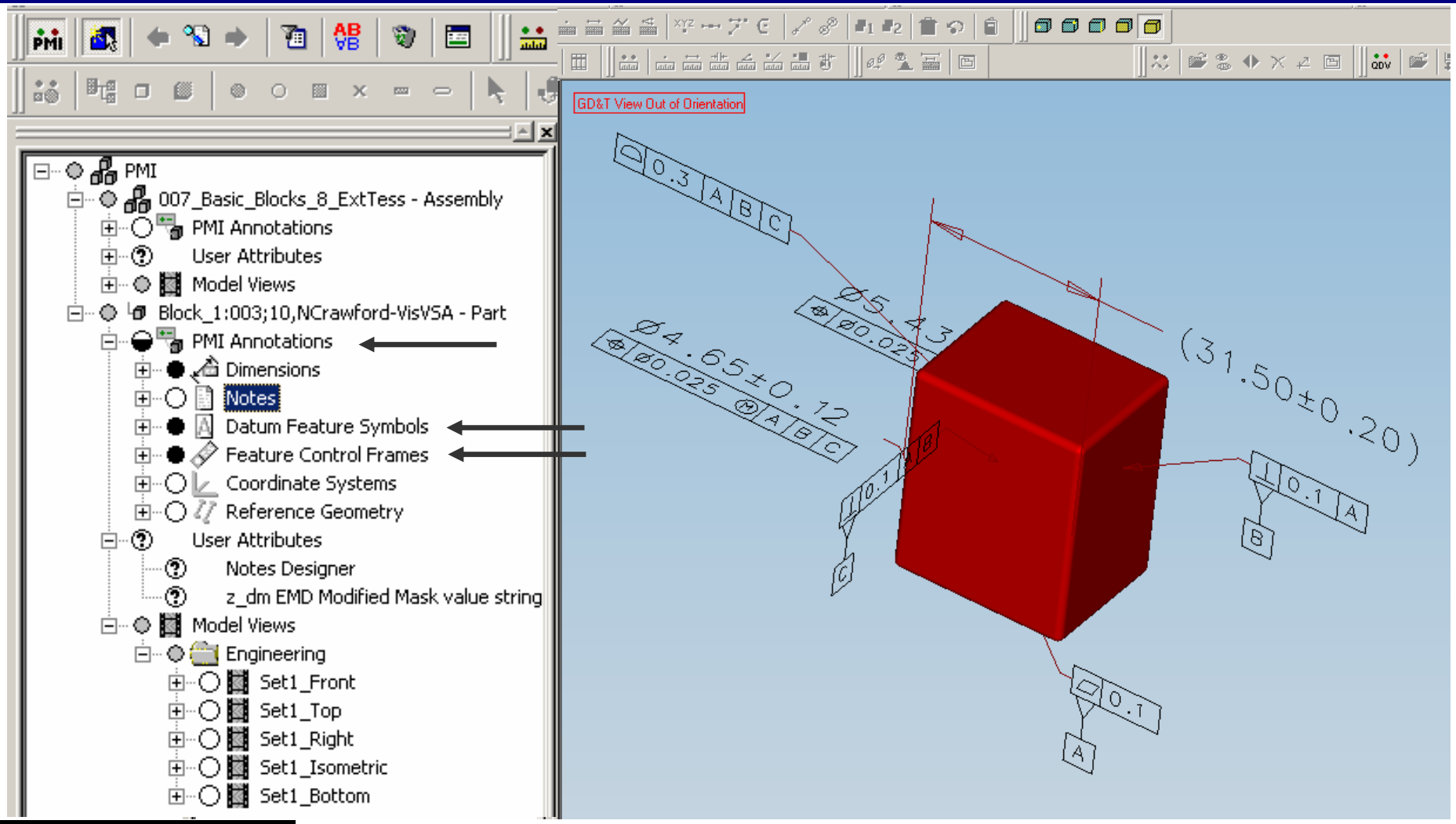

GEOMETRIC SOLUTIONS

WALTONEN ENGINEERING

Front View in JT Viewer
Not CAD, Not a CGM 2D Image
Note Engineering Folder for Model Views

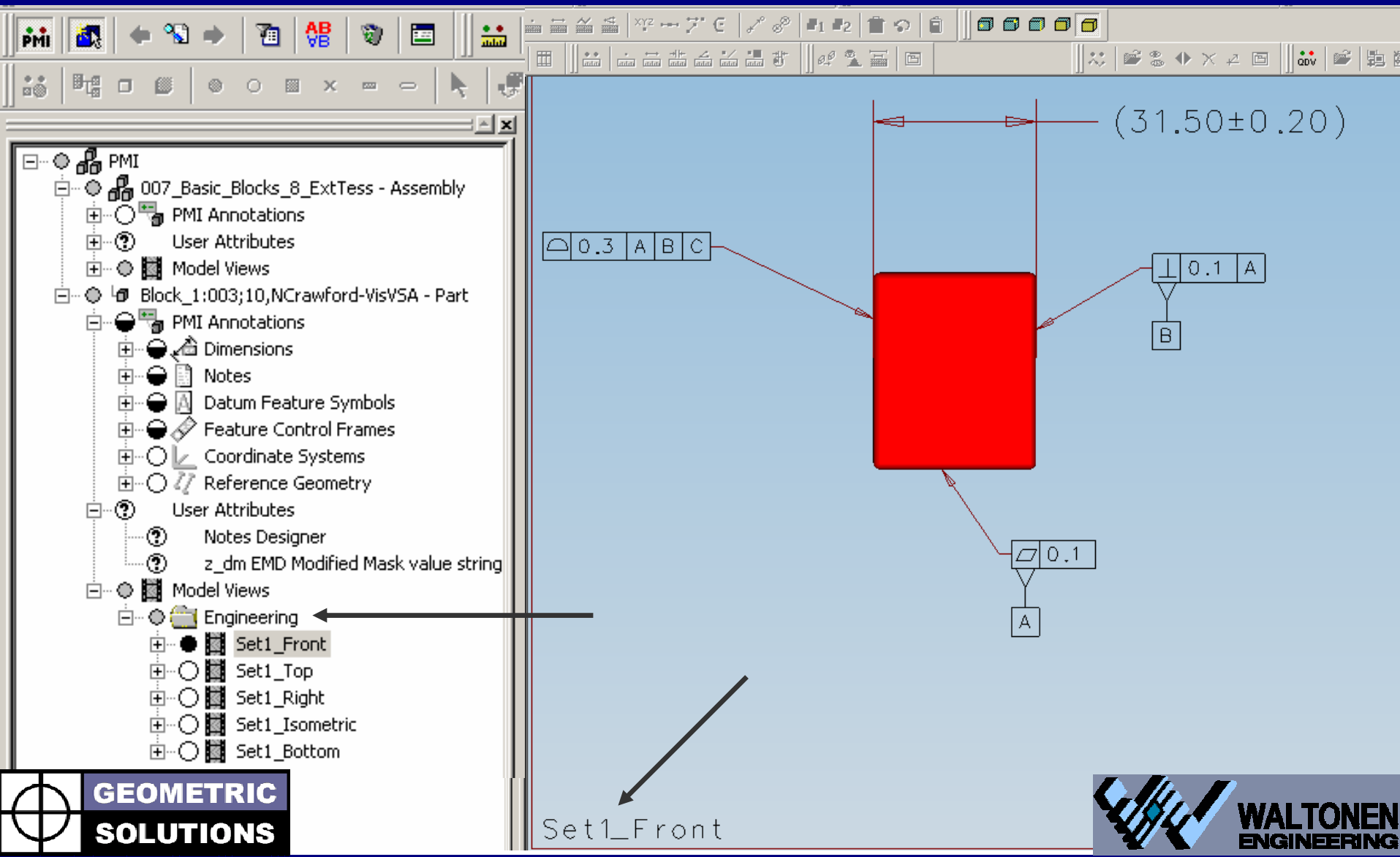

GEOMETRIC SOLUTIONS

WALTONEN ENGINEERING

Highlight Associated Elements Again ASME Y14.41 – Outside of CAD

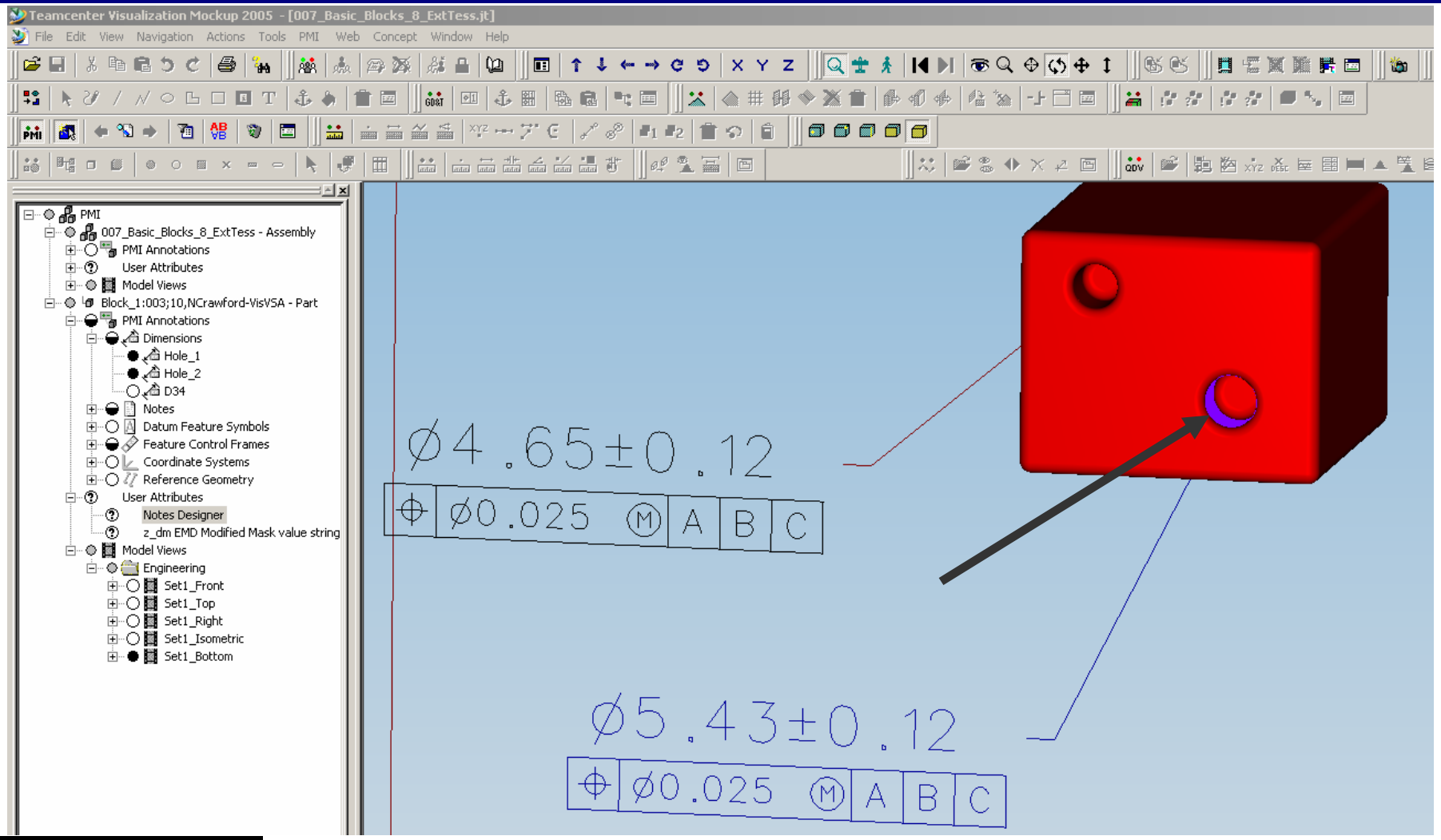

GEOMETRIC SOLUTIONS

WALTONEN ENGINEERING

NX4 Embedded 3D GD&T (SmarTol)

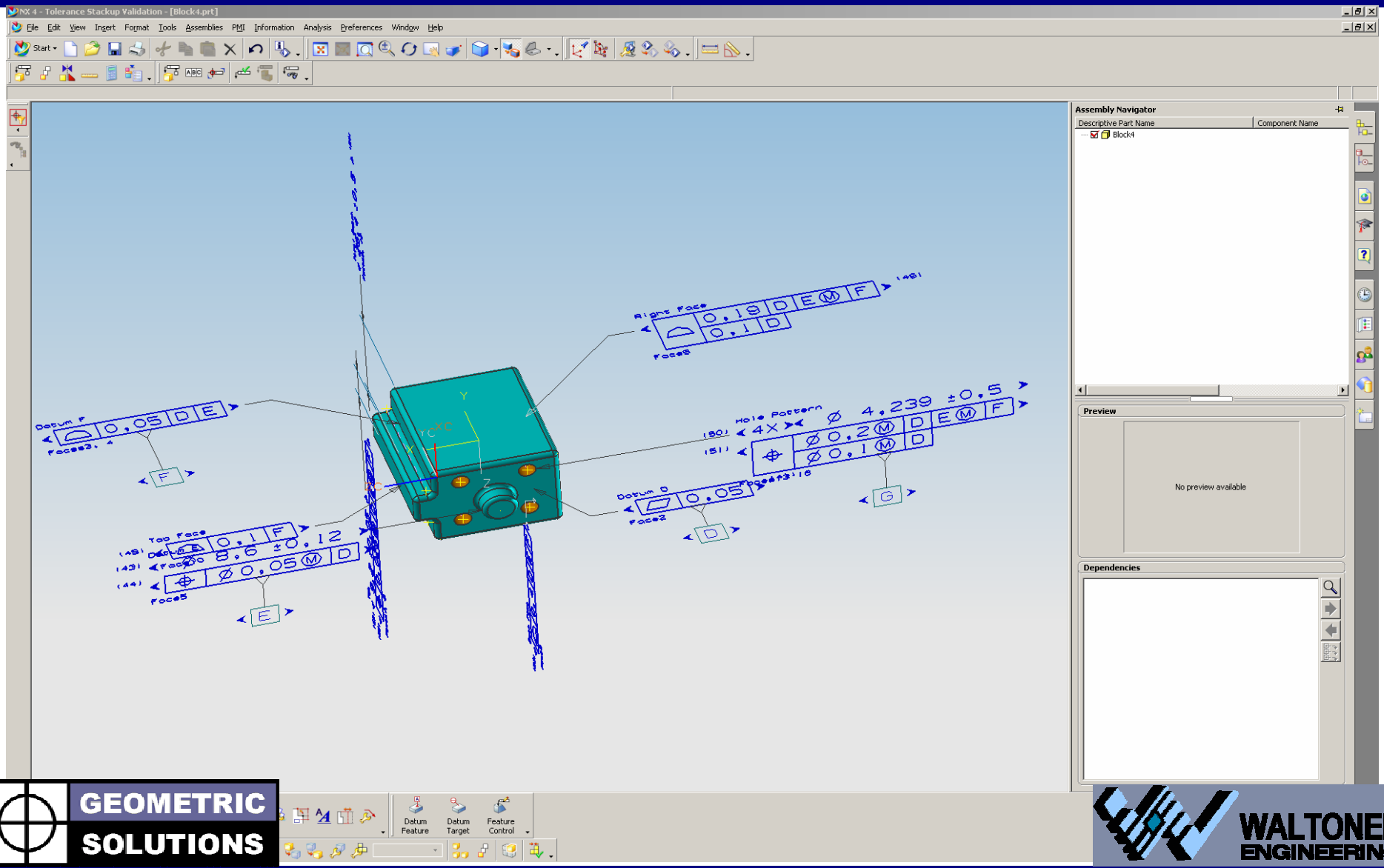

GEOMETRIC SOLUTIONS

WALTONEN ENGINEERING

NX4 Model View “Sets”
Embedded Dimension Display Options for Easy Identification

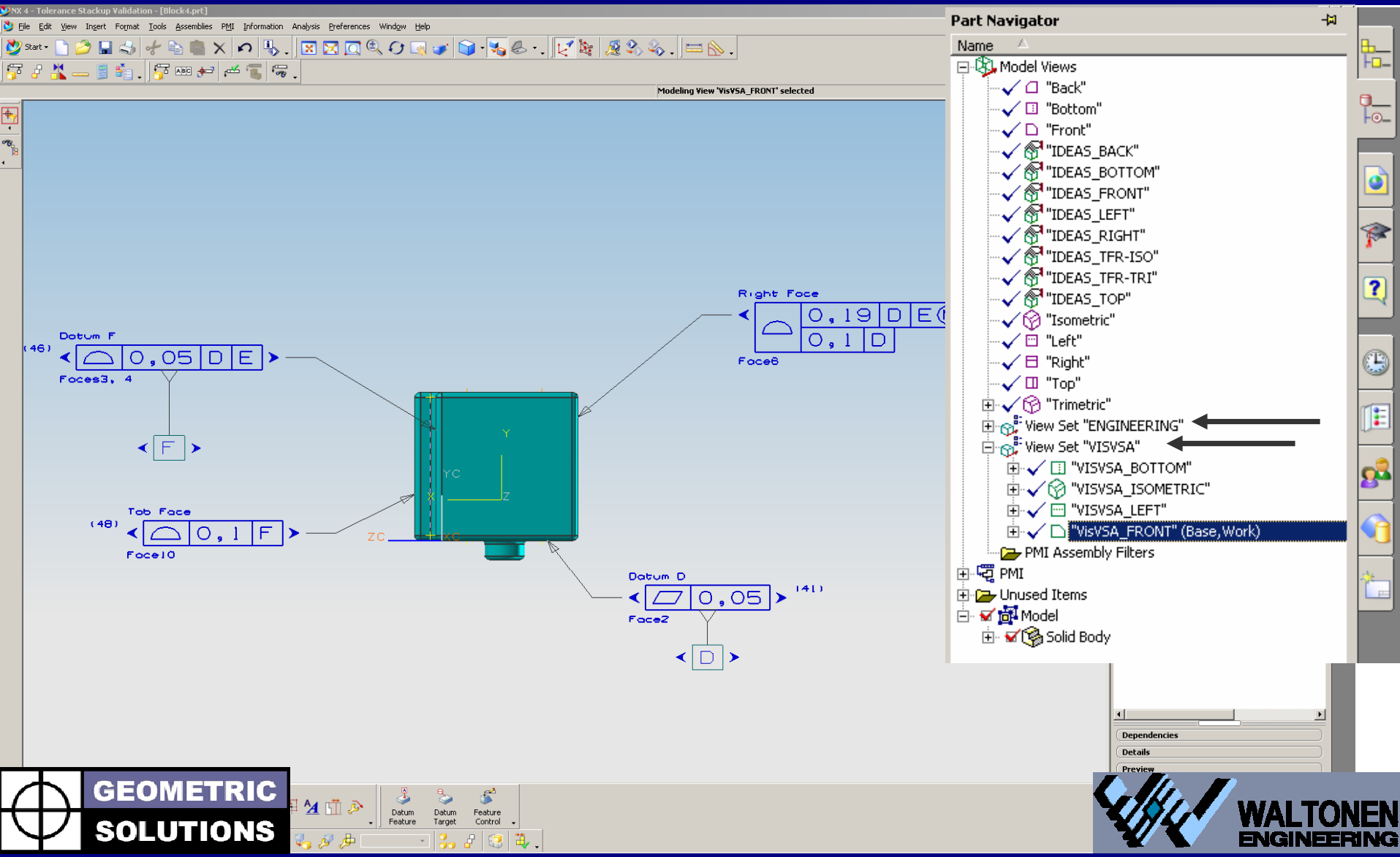

GEOMETRIC SOLUTIONS

WALTONEN ENGINEERING

Side and Bottom NX4 Model Views Easily Manage Display of GD&T

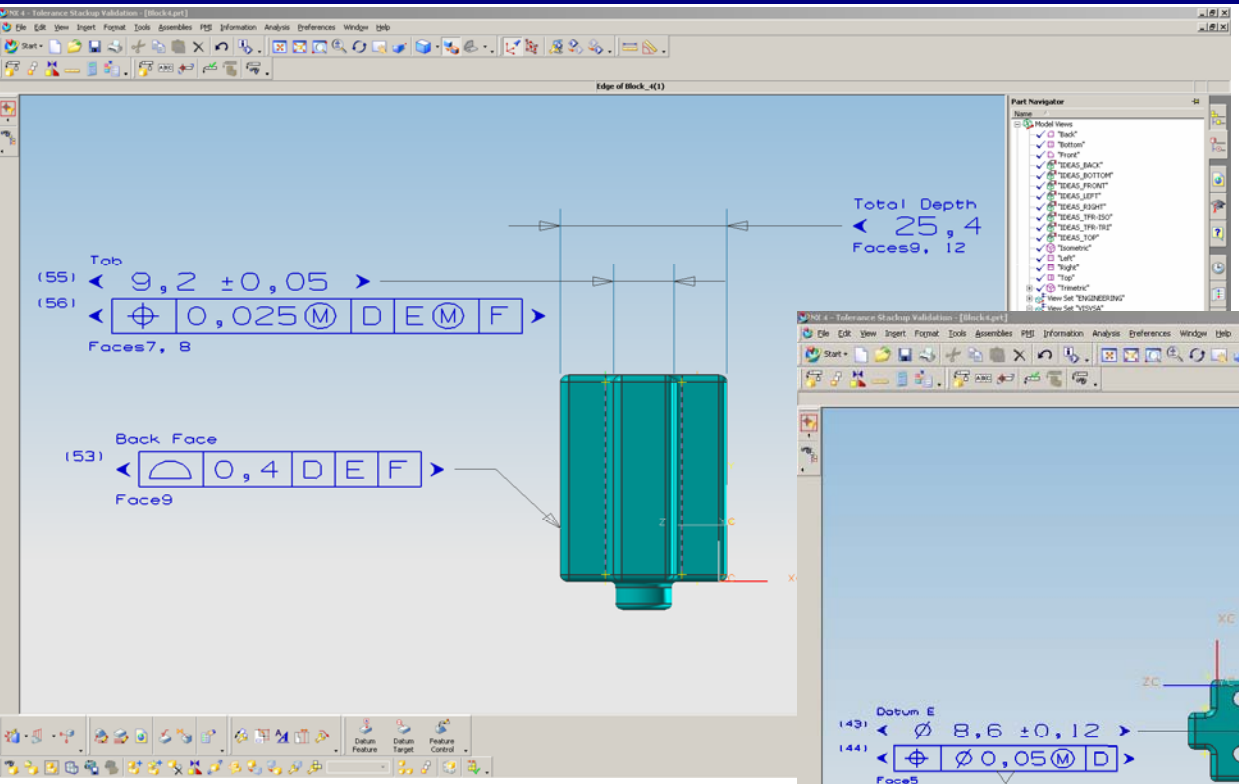

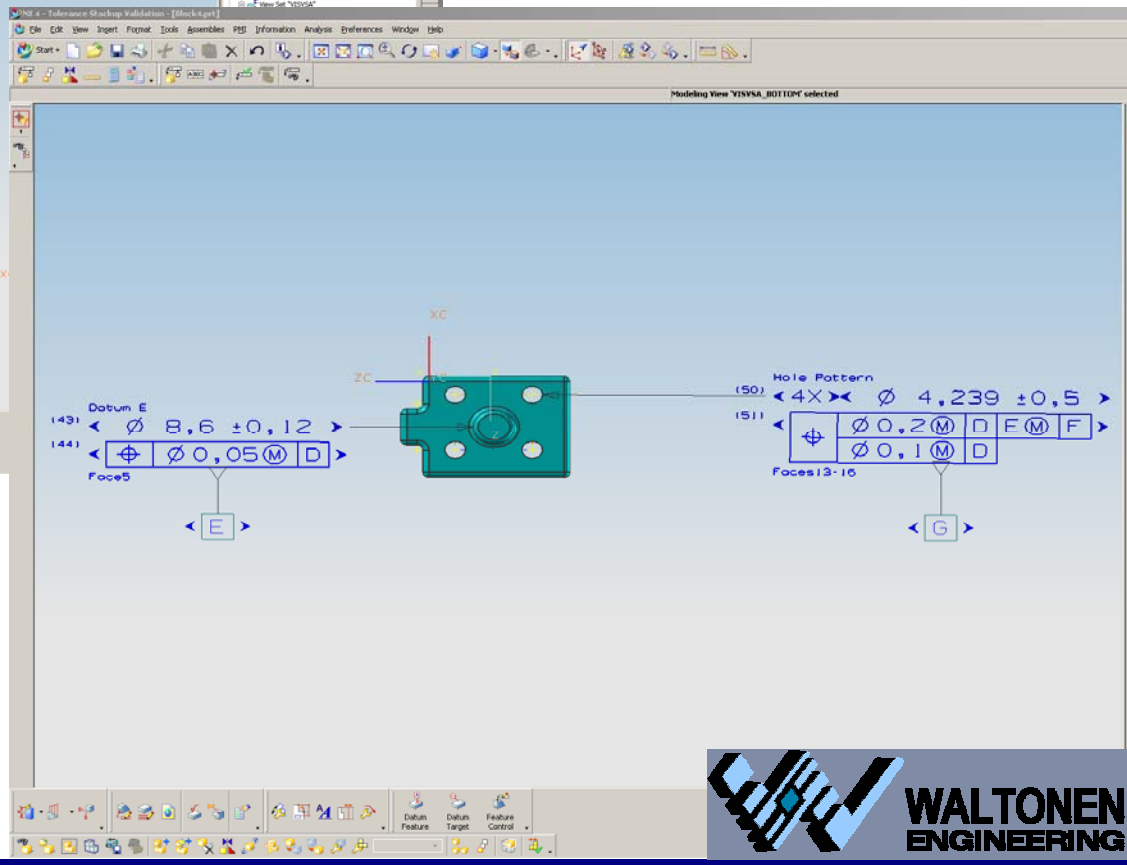

GEOMETRIC SOLUTIONS

WALTONEN ENGINEERING

“Validate Tolerance Specification” Tool Constraint Error Found

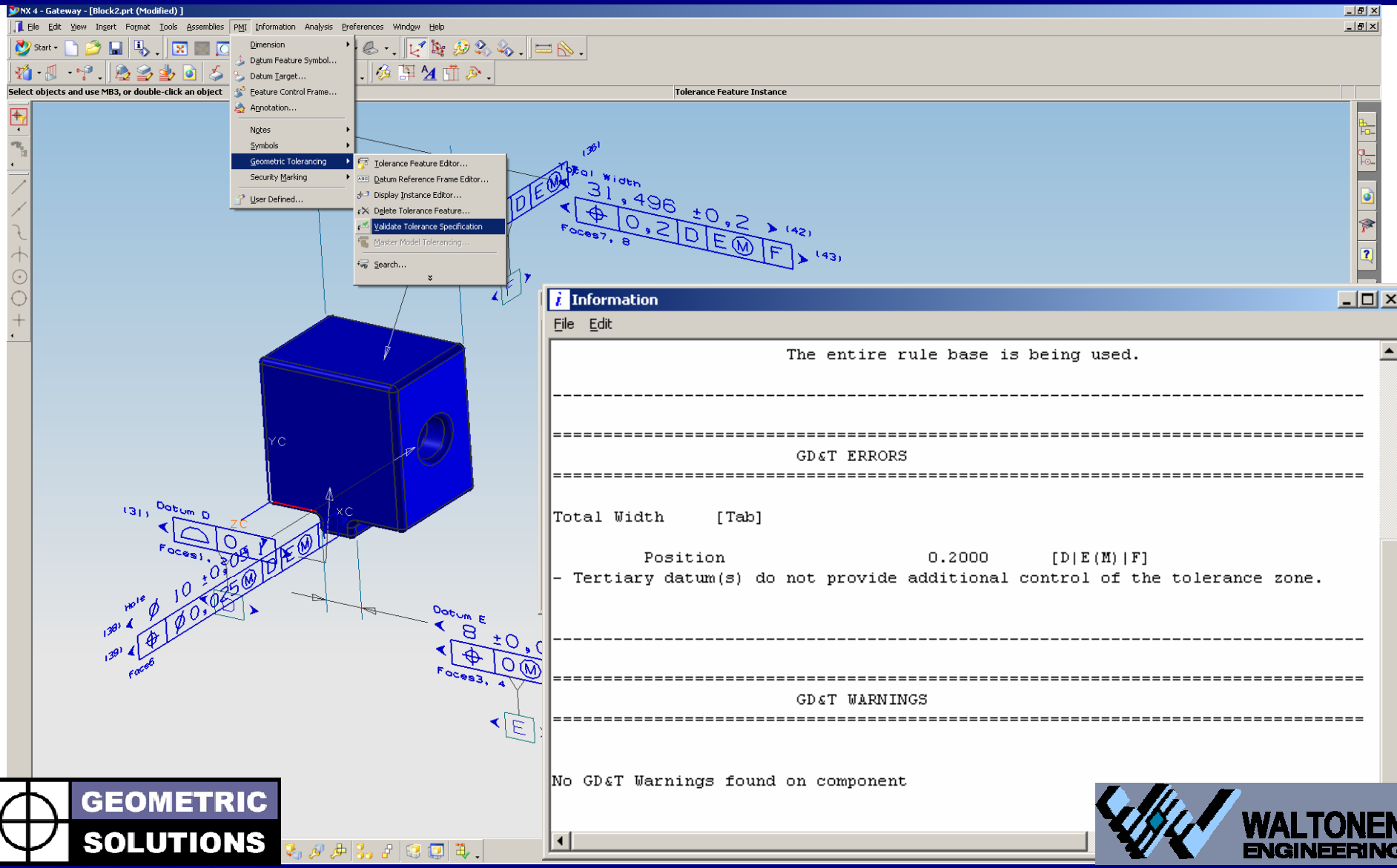

GEOMETRIC SOLUTIONS

WALTONEN ENGINEERING

Correct and Re-run
“Validate Tolerance Specification”

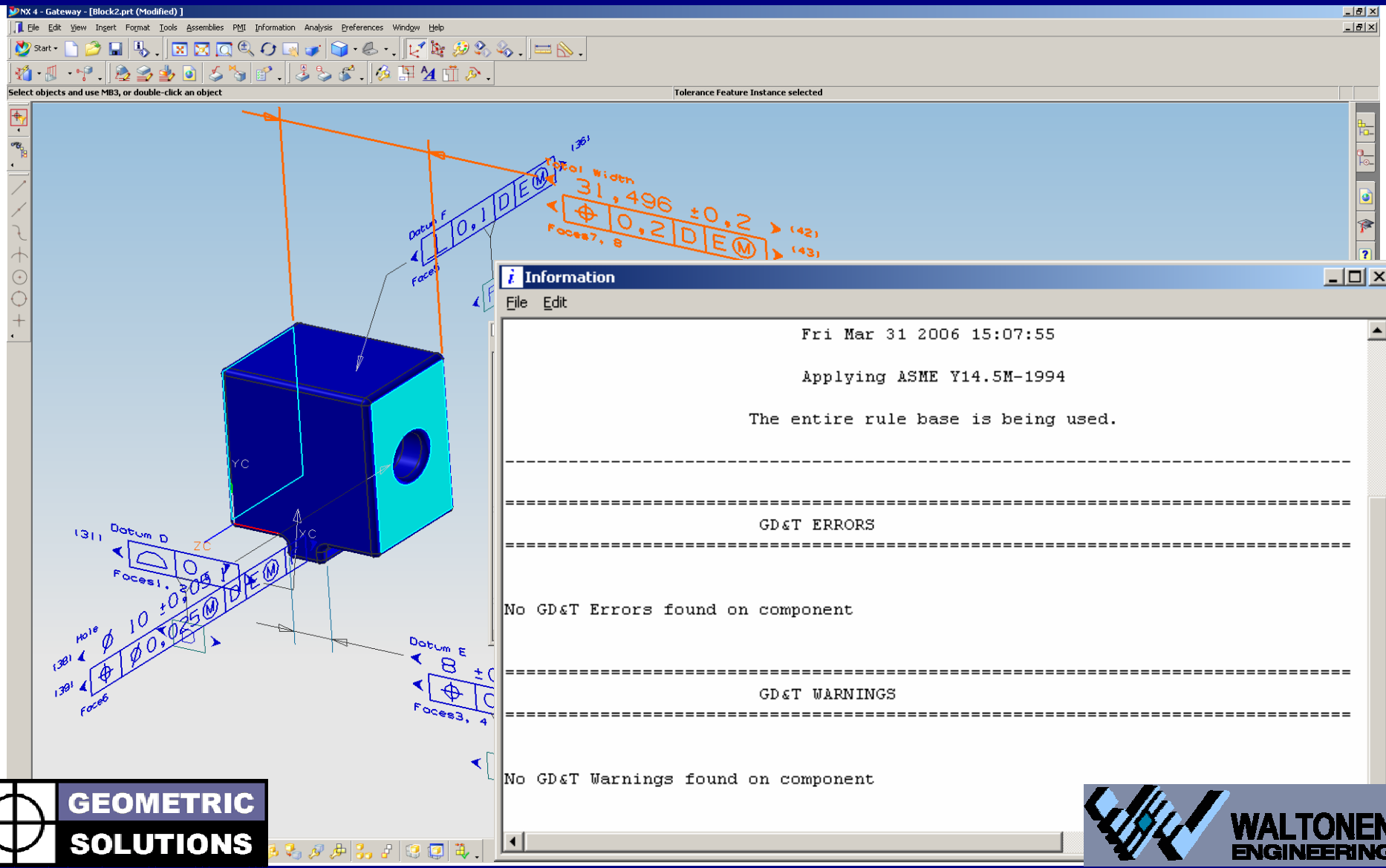

GEOMETRIC SOLUTIONS

WALTONEN ENGINEERING

NX4 New PMI Display
No Association to TSV or Validation Checker

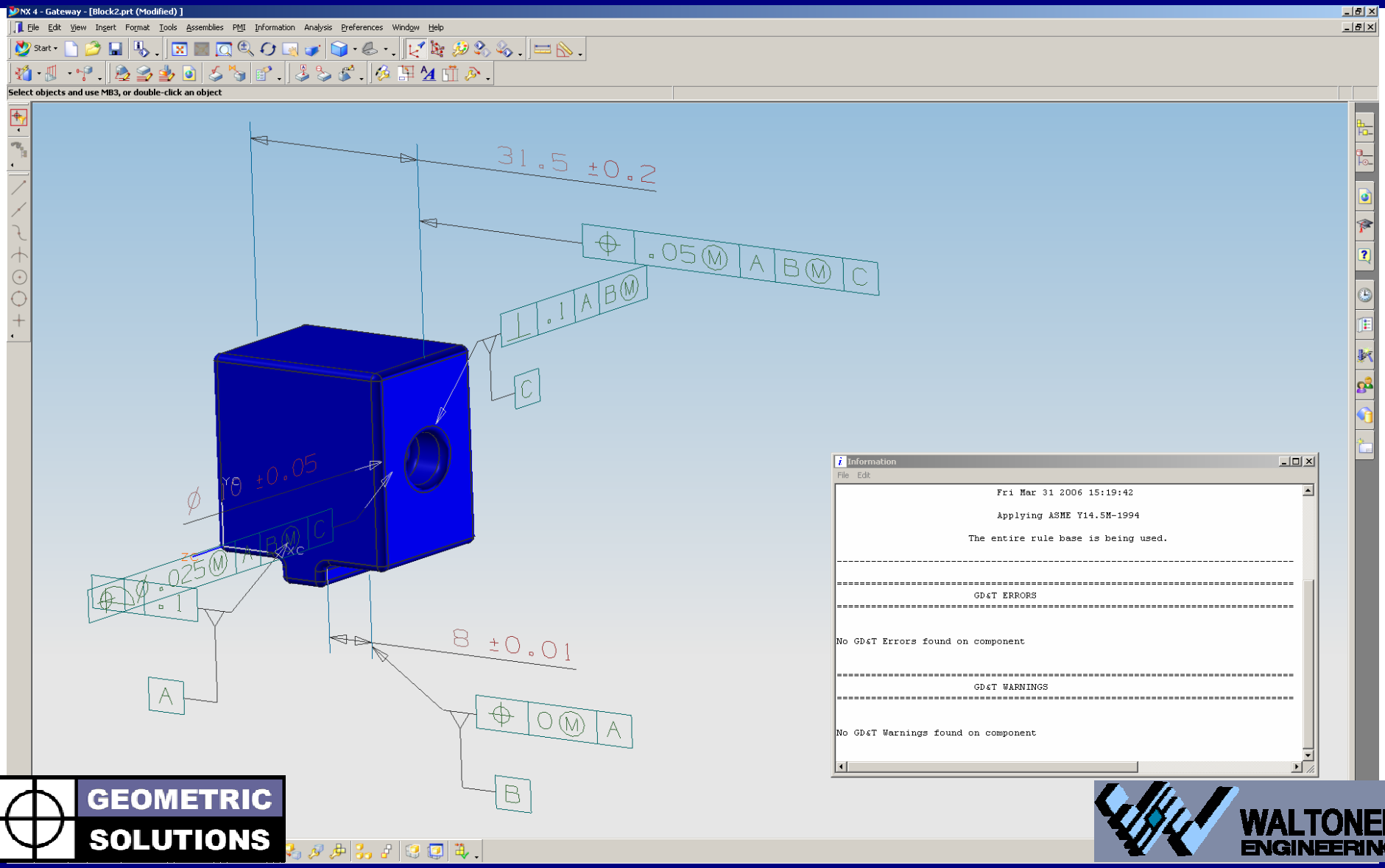

GEOMETRIC SOLUTIONS

WALTONEN ENGINEERING

NX4 PMI Has Different Display and User Interface Note Use of View Sets

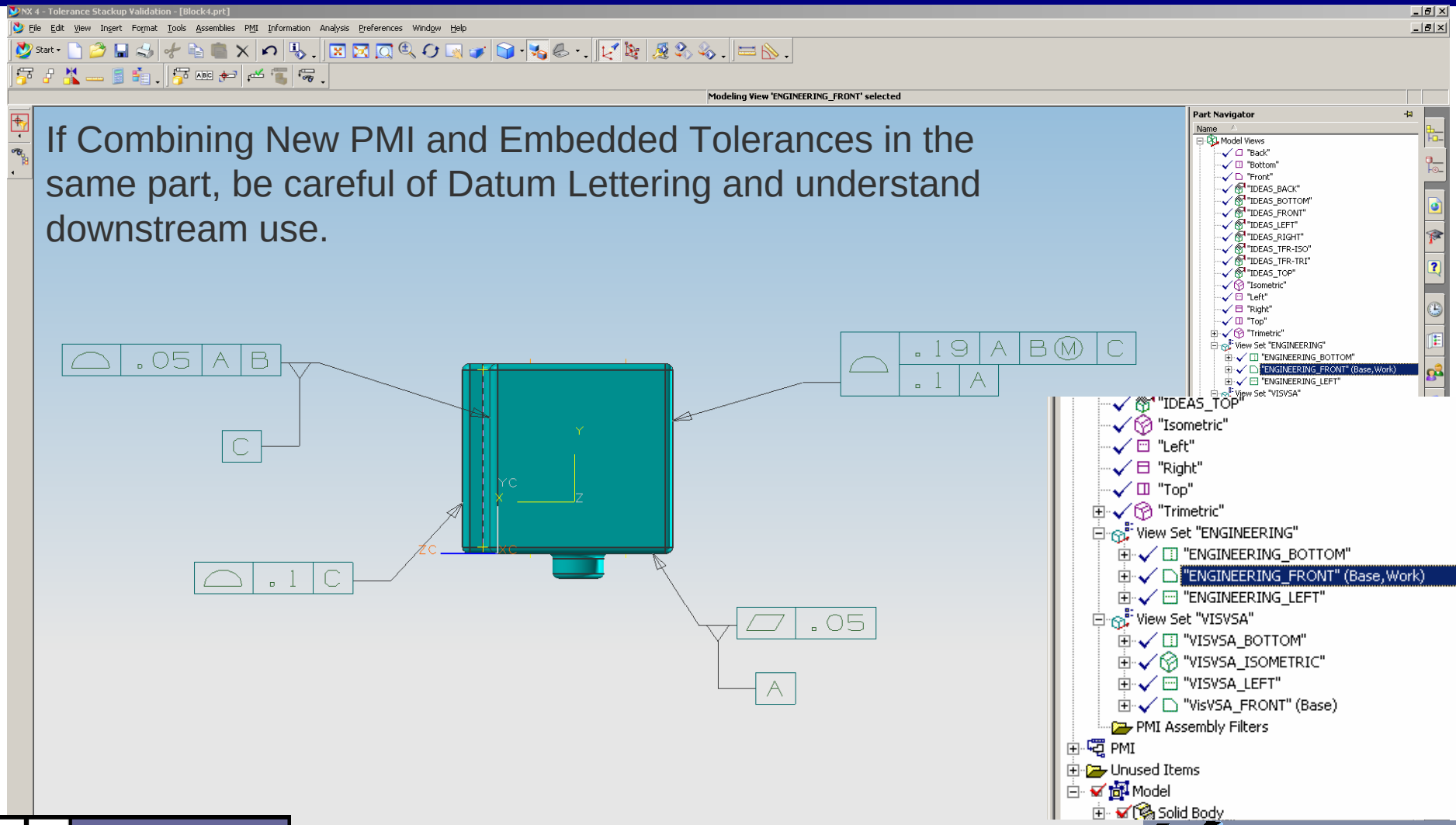

If Combining New PMI and Embedded Tolerances in the same part, be careful of Datum Lettering and understand downstream use.

GEOMETRIC SOLUTIONS

WALTONEN ENGINEERING

Associated Elements Highlight with Embedded Tolerances (ASME Y14.41)

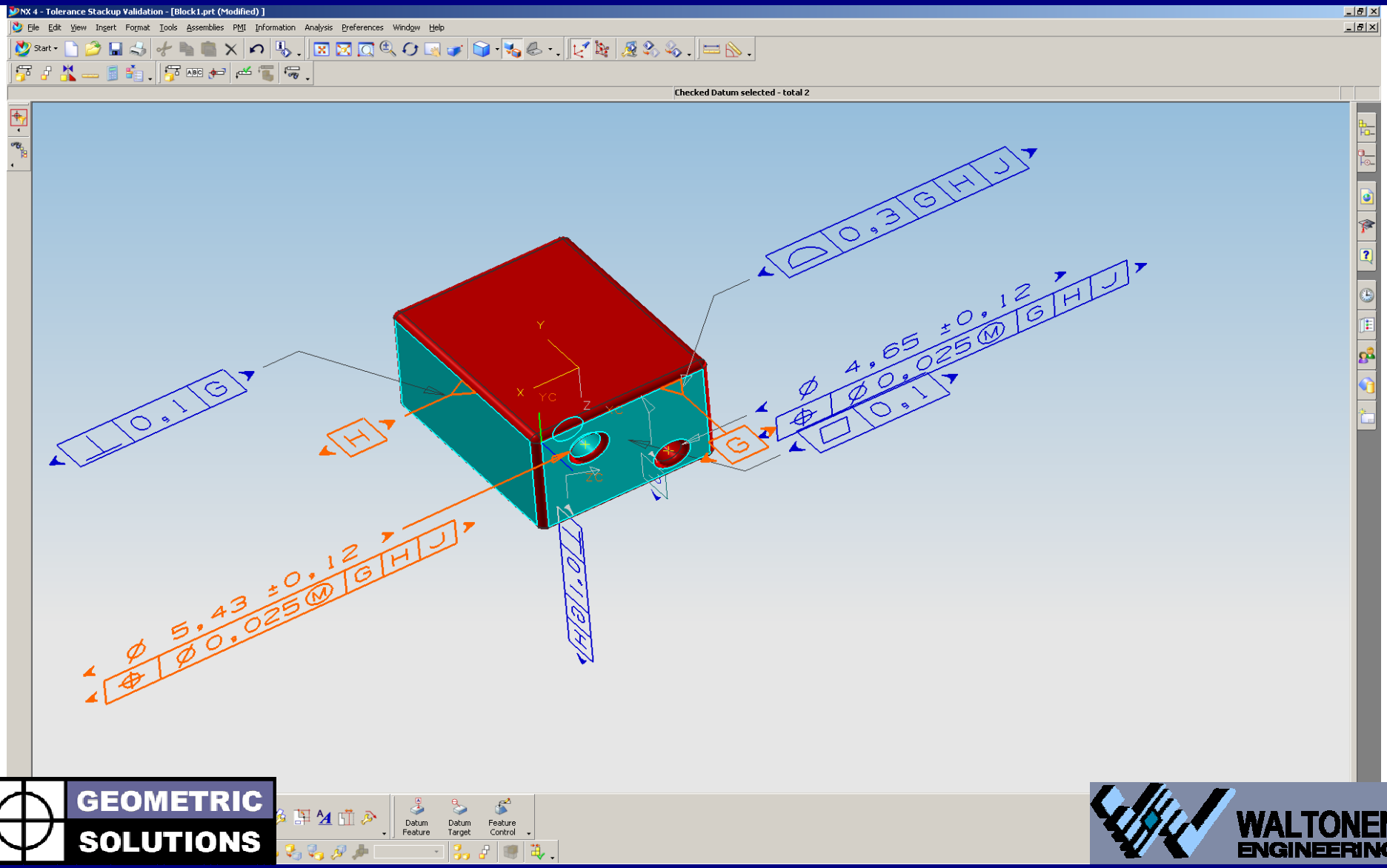

GEOMETRIC SOLUTIONS

WALTONEN ENGINEERING

NX4 PMI Also Highlights Related Features (ASME Y14.41)

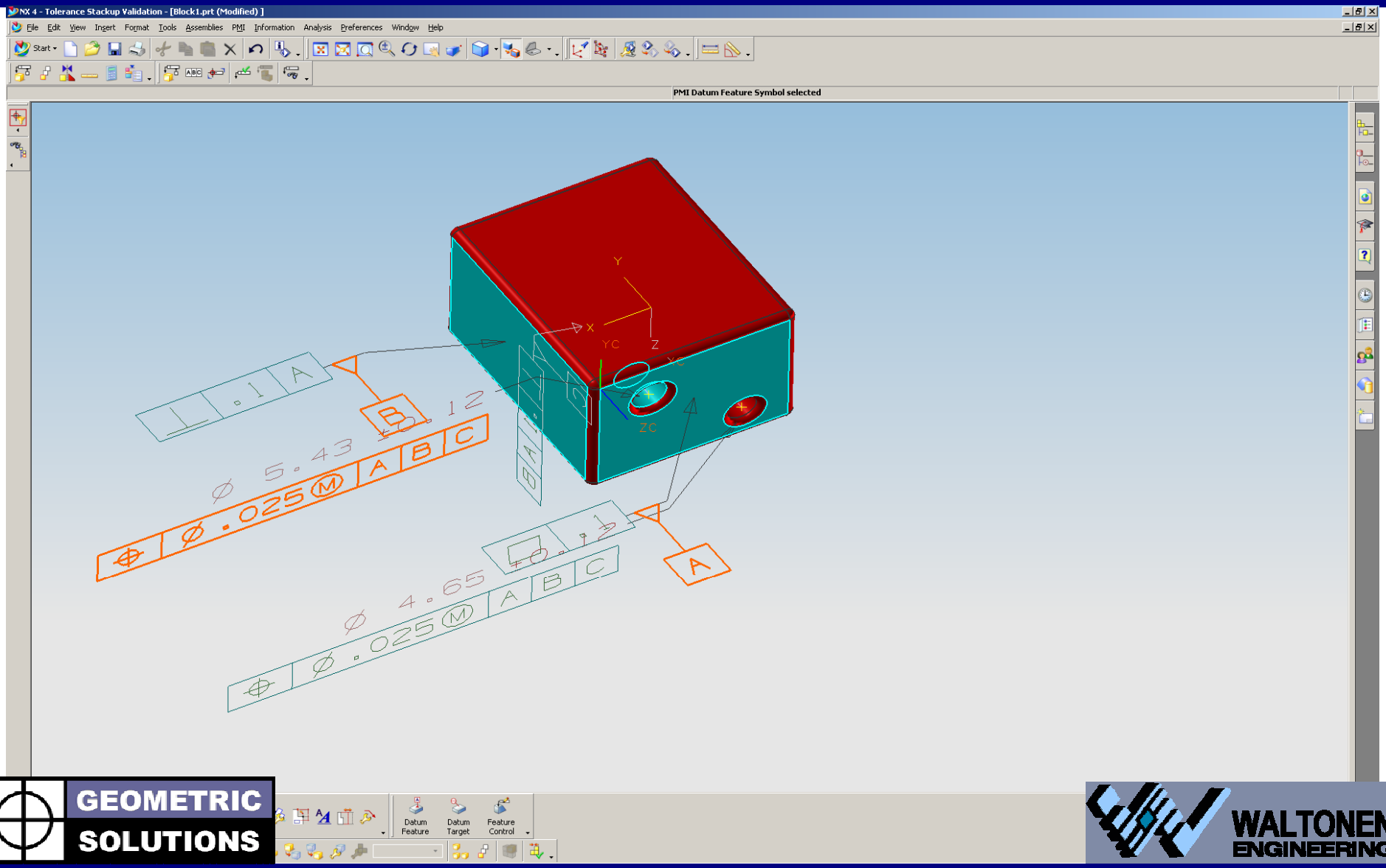

GEOMETRIC SOLUTIONS

WALTONEN ENGINEERING

Dimensional Management Technology and Process Track

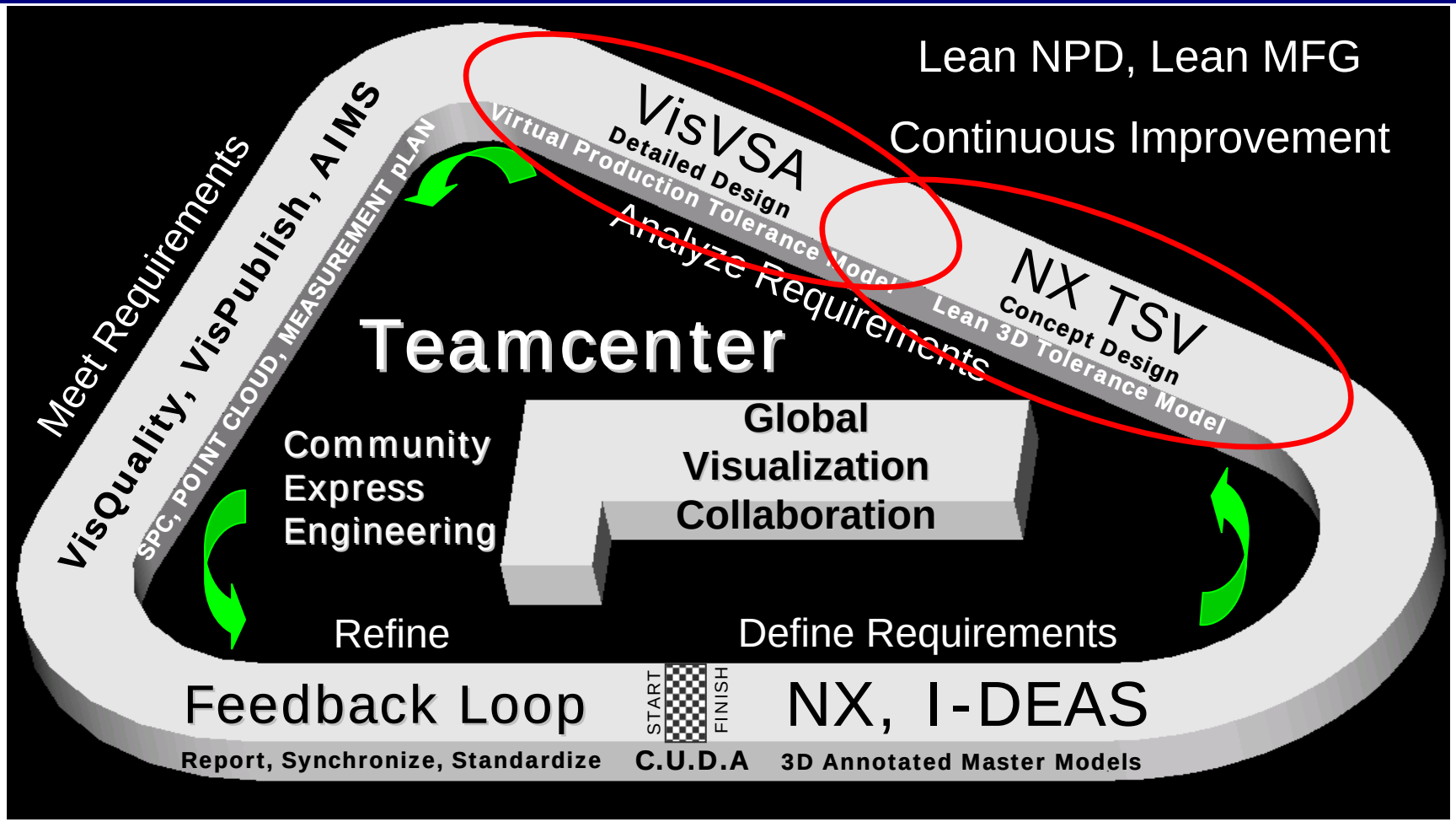

Communicate, Understand, Decide, Act

GEOMETRIC SOLUTIONS

WALTONEN ENGINEERING

Business Benefits of Analysis

- Consistent Enterprise Process
- Pro-active Continuous Product Improvement
- Re-use of Valid Tolerance Knowledge
- Reduce Physical Prototypes
- Reduce Design / Tooling Changes
- Reduce Related Travel Expense
- Reduce Related Time to Volume
- Improve Manufacturability

TSV: What does it look like?

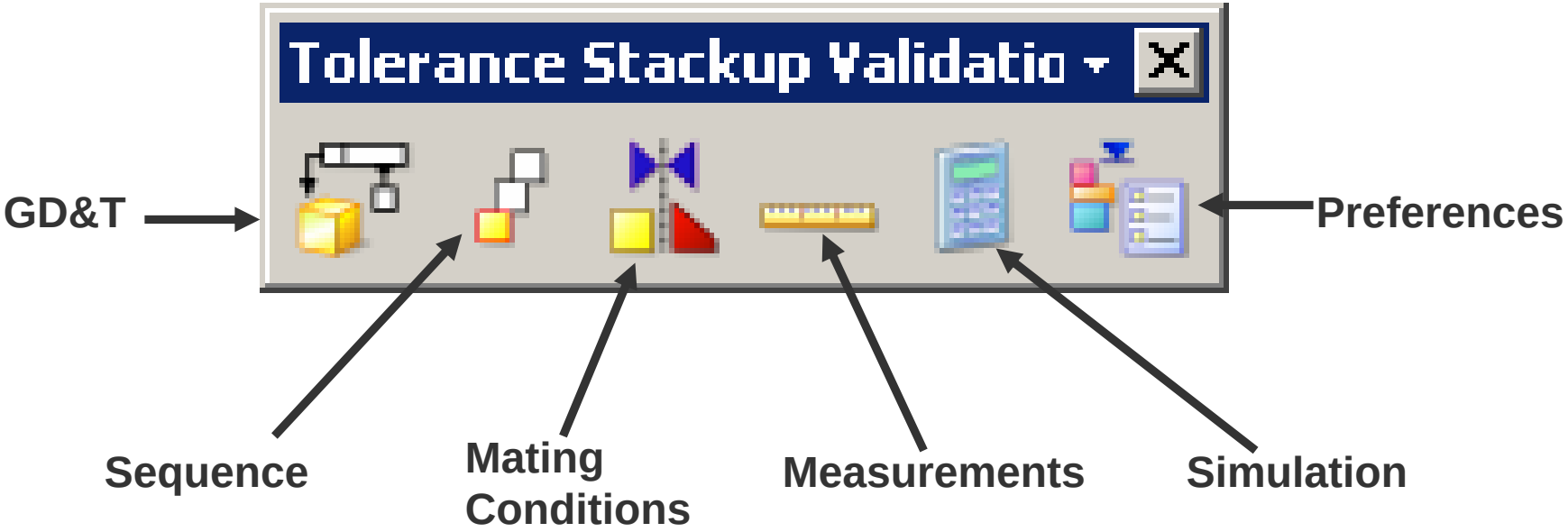

TSV: Create “Embedded” 3D GD&T (SmarTol), Sequence, and Mating Conditions are the same

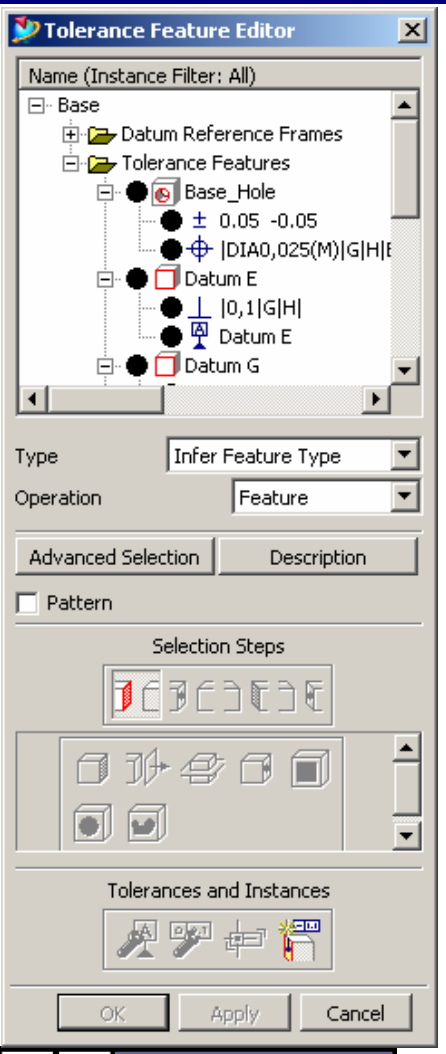

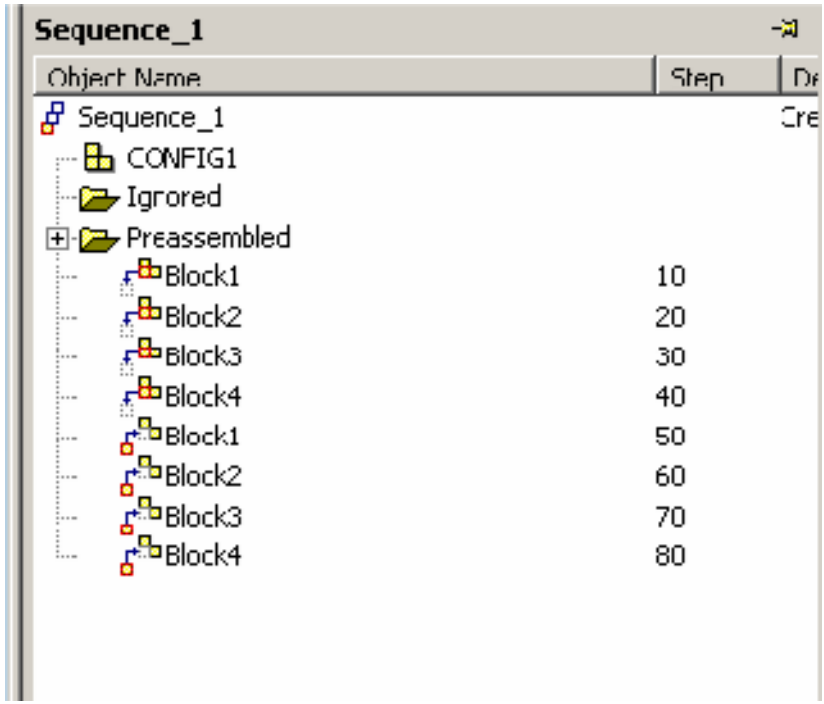

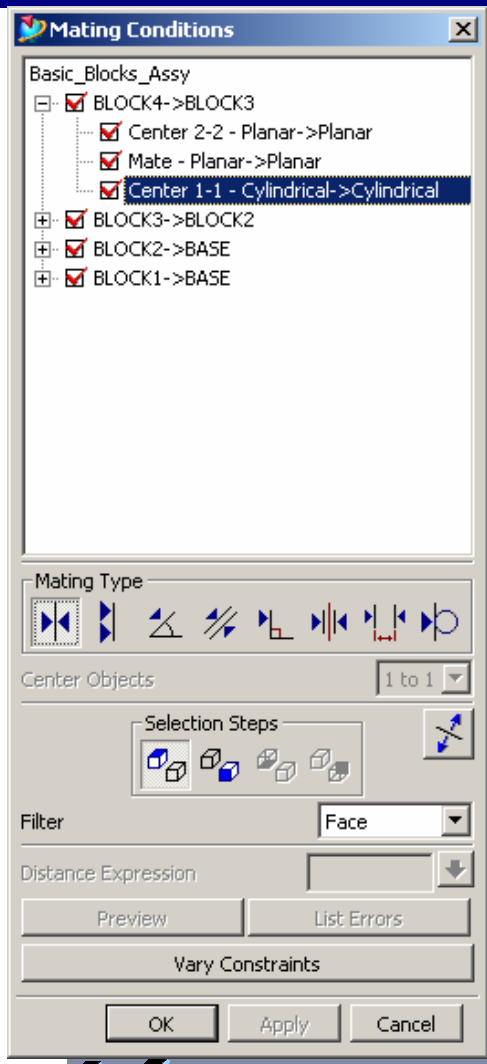

Previously Existing NX Tools

GEOMETRIC SOLUTIONS

WALTONEN ENGINEERING

TSV: Create Measurements
Graphically Display Existing Measurements

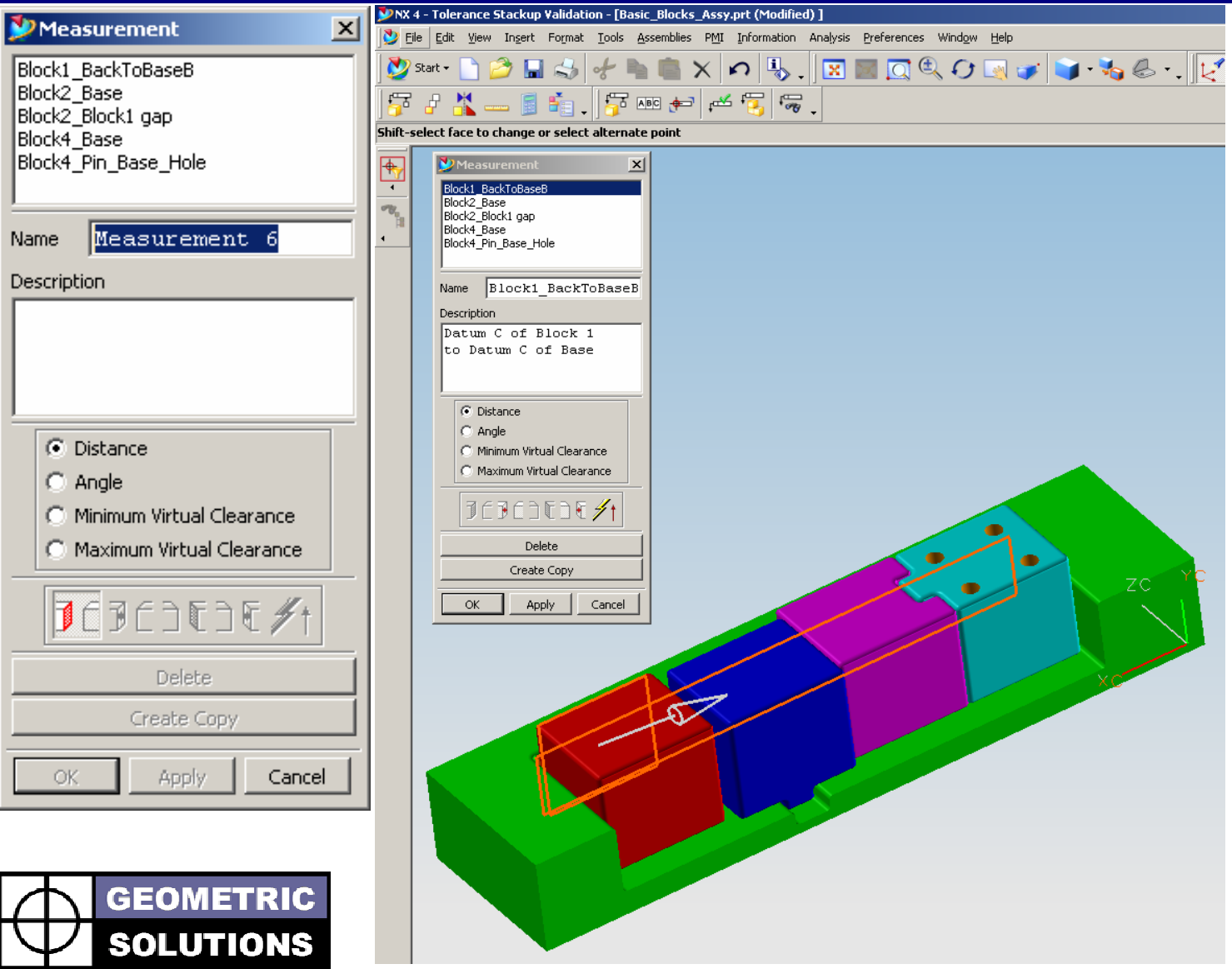

GEOMETRIC SOLUTIONS

WALTONEN ENGINEERING

TSV: Set Preferences & Run Simulations

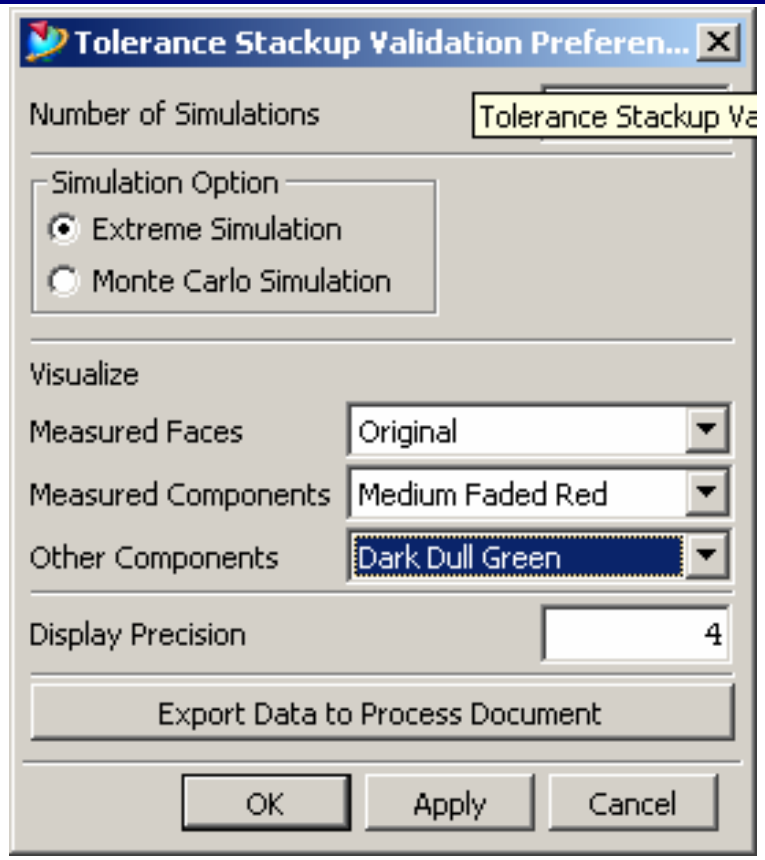

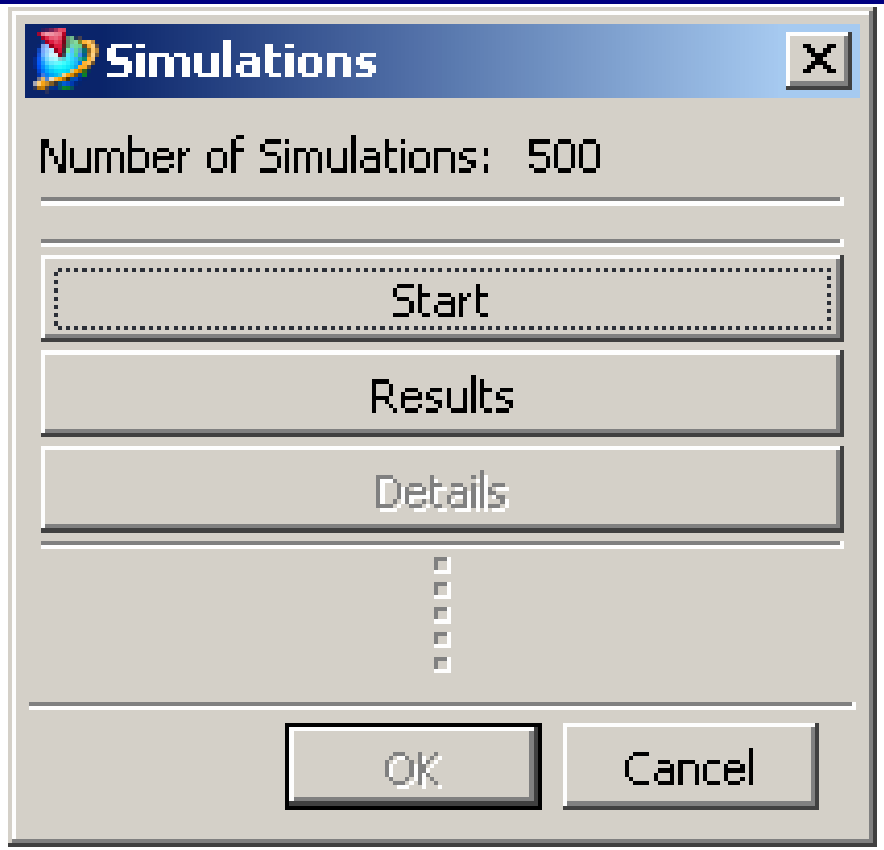

TSV: Fast Easy to Read Results

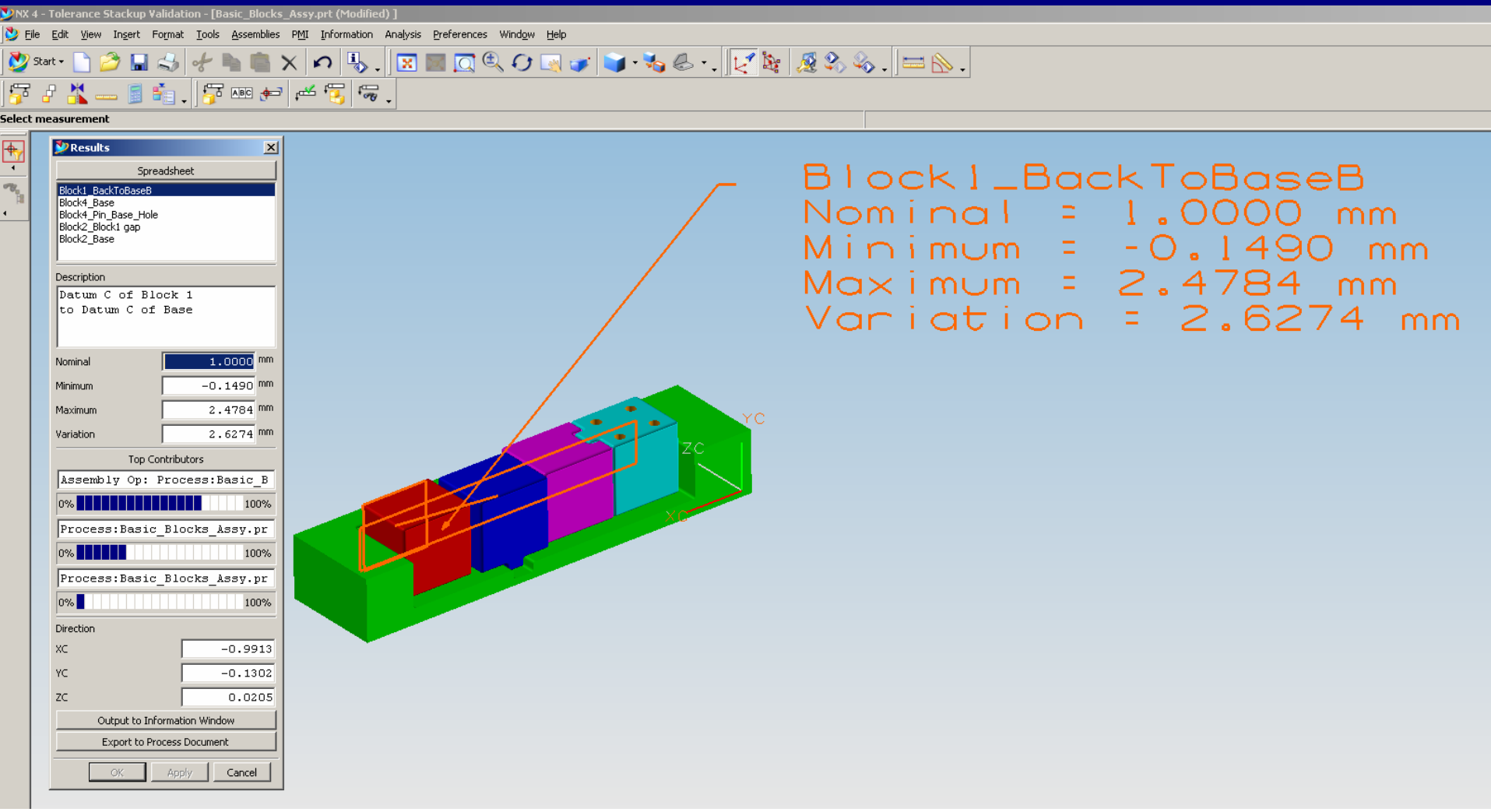

GEOMETRIC SOLUTIONS

WALTONEN ENGINEERING

TSV: Output Contributor List

Quickly Iterate Design & Tolerance Requirements
Evaluate Design Concepts for Tolerance Sensitivity & MFG Capability
Beats End of Project Hand Calculations

Information

File Edit

```
16 Mar 2006
19:08:42
Measurement: Block1_BackToBaseB
Units: mm
Description:      Datum C of Block 1
                  to Datum C of Base
Direction: XC      -0.9913, YC      -0.1302, ZC       0.0205
Nominal:         1.0000
Minimum:        -0.1490
Maximum:         2.4784
Variation:       2.6274
Contributor 1:        71.2645%      Assembly Op: Process:Basic_Blocks_Assy.prt:BLOCK1->BASE
Contributor 2:        26.9162%      Process:Basic_Blocks_Assy.prt:Base.prt:Pin1 , Size: 5.0000 +0.0500 -0.0500, , Callout: position |DIA 0.0250(M)|[G|H|E]|
Contributor 3:         1.3734%      Process:Basic_Blocks_Assy.prt:Base.prt:Datum H , Size:  , Callout: perpendicular | 0.1000|[G]|
Contributor 4:         0.4157%      Process:Basic_Blocks_Assy.prt:Base.prt:Datum E , Size:  , Callout: perpendicular | 0.1000|[G|H]|
Contributor 5:         0.0301%      Process:Basic_Blocks_Assy.prt:Base.prt:Pin2 , Size: 4.0000 +0.0500 -0.0500, , Callout: position |DIA 0.0250(M)|[G|H|E]|
```

TSV: Standard Excel Export Sheet 1: Results

Worksheet in Tolerance Stackup Validation Results

	A	B	C	D	E	F	G	H	I	J	K
1	21 Mar 2006 12:13:42										
2											
3	**Measurement**	**Units**	**Nominal**	**Minimum**	**Maximum**	**Variation**	**Contributor 1**	**Contributor 2**	**Contributor 3**	**Relative Importance 0.....100**	**Description**
4	Block1_BackToBaseB	mm	1.0000	-0.1490	2.4784	2.6274	Assembly Op: Process:Basic_Blocks_Assy.prt :BLOCK1->BASE	Process:Basic_Blocks_Assy.prt :Base.prt:Pin1 , Size: 5.0000 +0.0500 -0.0500, , Callout: position |DIA 0.0250(M)|[G|H|E]|	Process:Basic_Blocks_Assy.prt :Base.prt:Datum H , Size: , Callout: perpendicular | 0.1000|[G]|	|||\

TSV: Excel Export
Sheet 2: Contributors

	A	B	C	D	E
1	21 Mar 2006 12:13:39				
2					
3	**Measurement Name**	**Contributor Name**	**Size**	**Callout**	**Contribution**
4	Block1_BackToBaseB	Assembly Op: Process:Basic_Blocks_Assy.prt:BLOCK1->BASE			71.2645
5		Process:Basic_Blocks_Assy.prt:Base.prt:Pin1	5.0000	+0.0500 -0.0500 position |DIA 0.0250(M)|[G|H|E]|	26.9162
6		Process:Basic_Blocks_Assy.prt:Base.prt:Datum H		perpendicular | 0.1000|[G]|	1.3734
7		Process:Basic_Blocks_Assy.prt:Base.prt:Datum E		perpendicular | 0.1000|[G|H]|	0.4157
8		Process:Basic_Blocks_Assy.prt:Base.prt:Pin2	4.0000	+0.0500 -0.0500 position |DIA 0.0250(M)|[G|H|E]|	0.0301
9	Block4_Base	Assembly Op: Process:Basic_Blocks_Assy.prt:BLOCK4->BLOCK3			92.91
10		Process:Basic_Blocks_Assy.prt:Base.prt:Base_Hole	9.2000	+0.0500 -0.0500 position |DIA 0.0250(M)|[G|H|E]|	4.0325
11		Process:Basic_Blocks_Assy.prt:Base.prt:Datum G		flatness | 0.1000||	2.1643
12		Process:Basic_Blocks_Assy.prt:Base.prt:Datum H		perpendicular | 0.1000|[G]|	0.8932
13	Block4_Pin_Base_Hole	Assembly Op: Process:Basic_Blocks_Assy.prt:BLOCK4->BLOCK3			96.0847
14		Process:Basic_Blocks_Assy.prt:Base.prt:Base_Hole	9.2000	+0.0500 -0.0500 position |DIA 0.0250(M)|[G|H|E]|	3.8969
15		Process:Basic_Blocks_Assy.prt:Base.prt:Datum G		flatness | 0.1000||	0.0184
16	Block2_Block1gap	Assembly Op: Process:Basic_Blocks_Assy.prt:BLOCK1->BASE			82.408
17		Process:Basic_Blocks_Assy.prt:Base.prt:Pin1	5.0000	+0.0500 -0.0500 position |DIA 0.0250(M)|[G|H|E]|	11.8324
18		Process:Basic_Blocks_Assy.prt:Base.prt:Slot_Stop		surface_profile | 0.1000|[G|H|E]|	5.2226
19		Process:Basic_Blocks_Assy.prt:Base.prt:Datum G		flatness | 0.1000||	0.4506
20		Process:Basic_Blocks_Assy.prt:Block1.prt:Datum_G		flatness | 0.1000||	0.0865
		Process:Basic_Blocks_Assy.prt:Base.prt:Slot_Stop		surface_profile | 0.1000|[G|H|E]|	
		Process:Basic_Blocks_Assy.prt:Base.prt:Datum G		flatness | 0.1000||	

GEOMETRIC SOLUTIONS

WALTONEN ENGINEERING

TSV Export To VisVSA

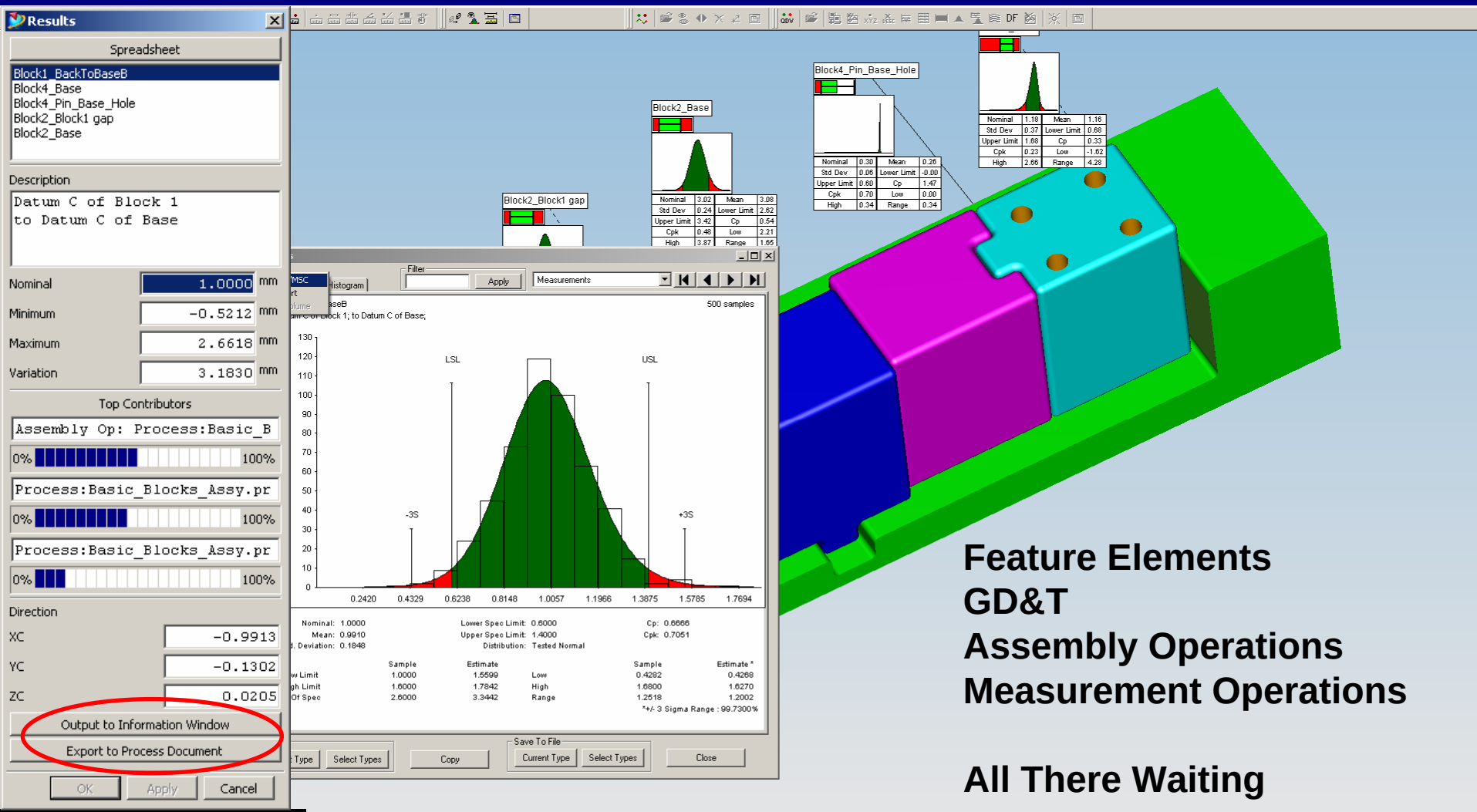

Feature Elements
GD&T
Assembly Operations
Measurement Operations

All There Waiting

GEOMETRIC SOLUTIONS

WALTONEN ENGINEERING

VisVSA
Virtual Production Tolerance Modeling

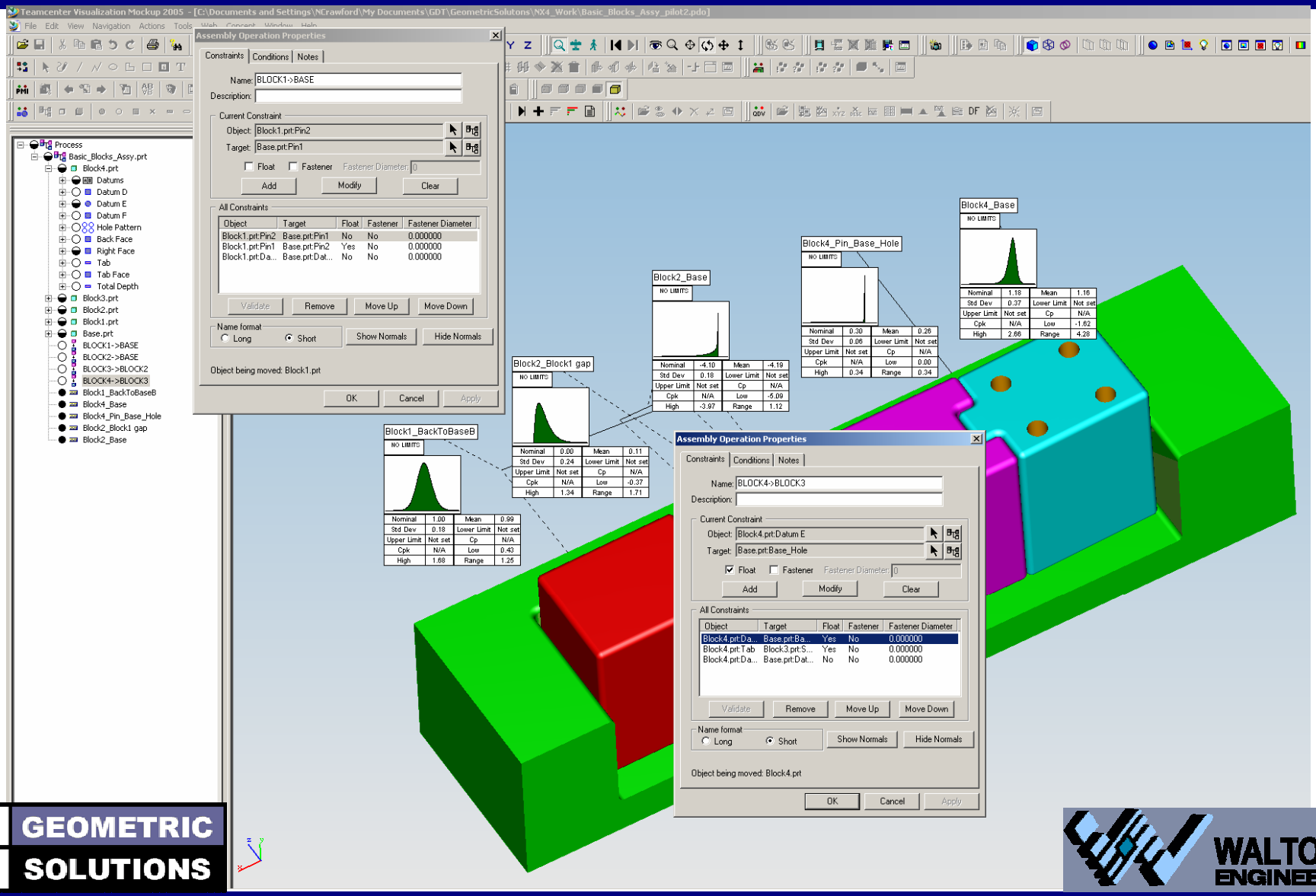

GEOMETRIC SOLUTIONS

WALTONEN ENGINEERING

VisVSA Fundamental Interface
Simple Tabs in a workflow sequence

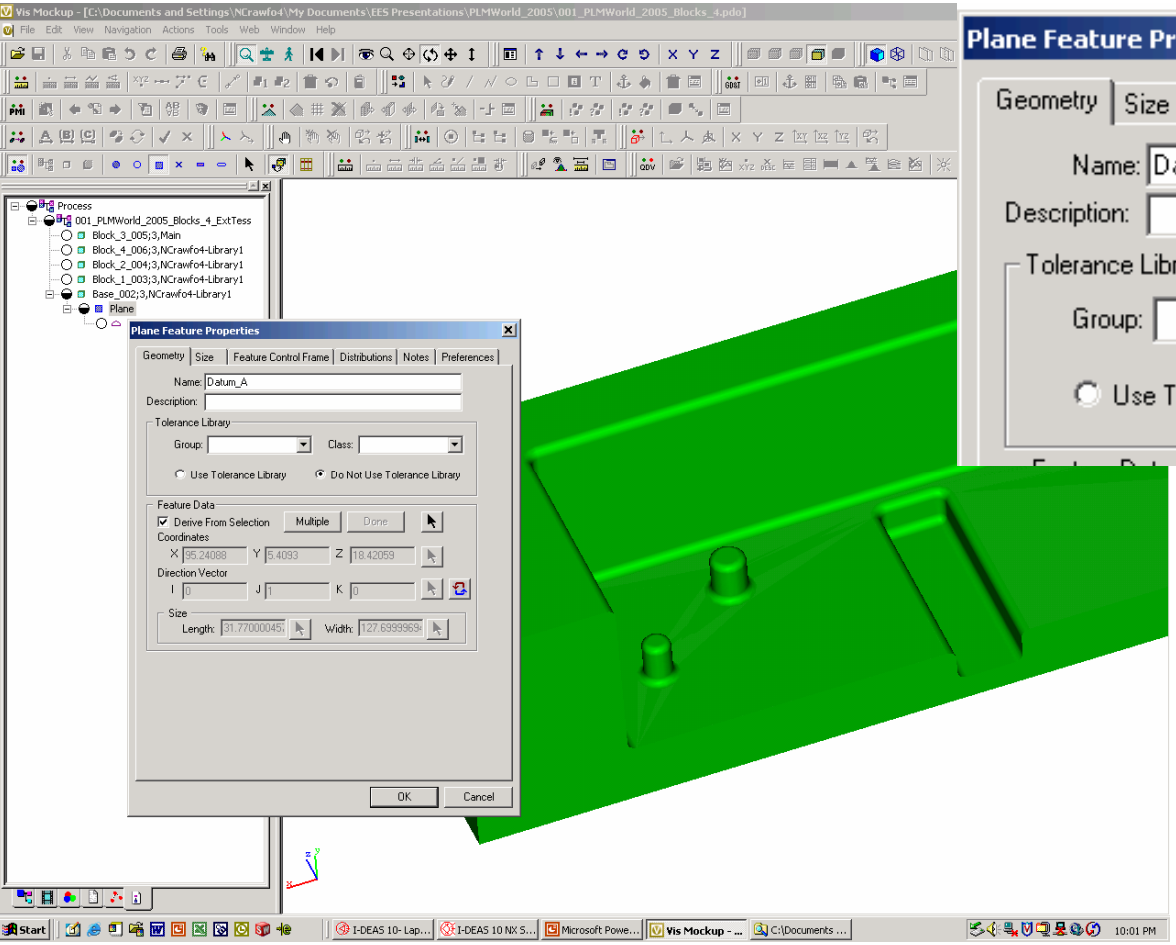

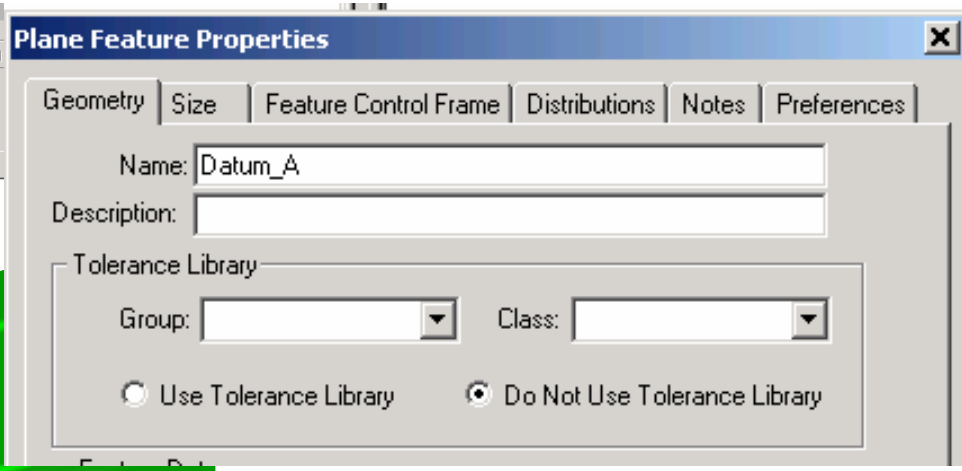

GEOMETRIC SOLUTIONS

WALTONEN ENGINEERING

VisVSA Size Tolerance Tab

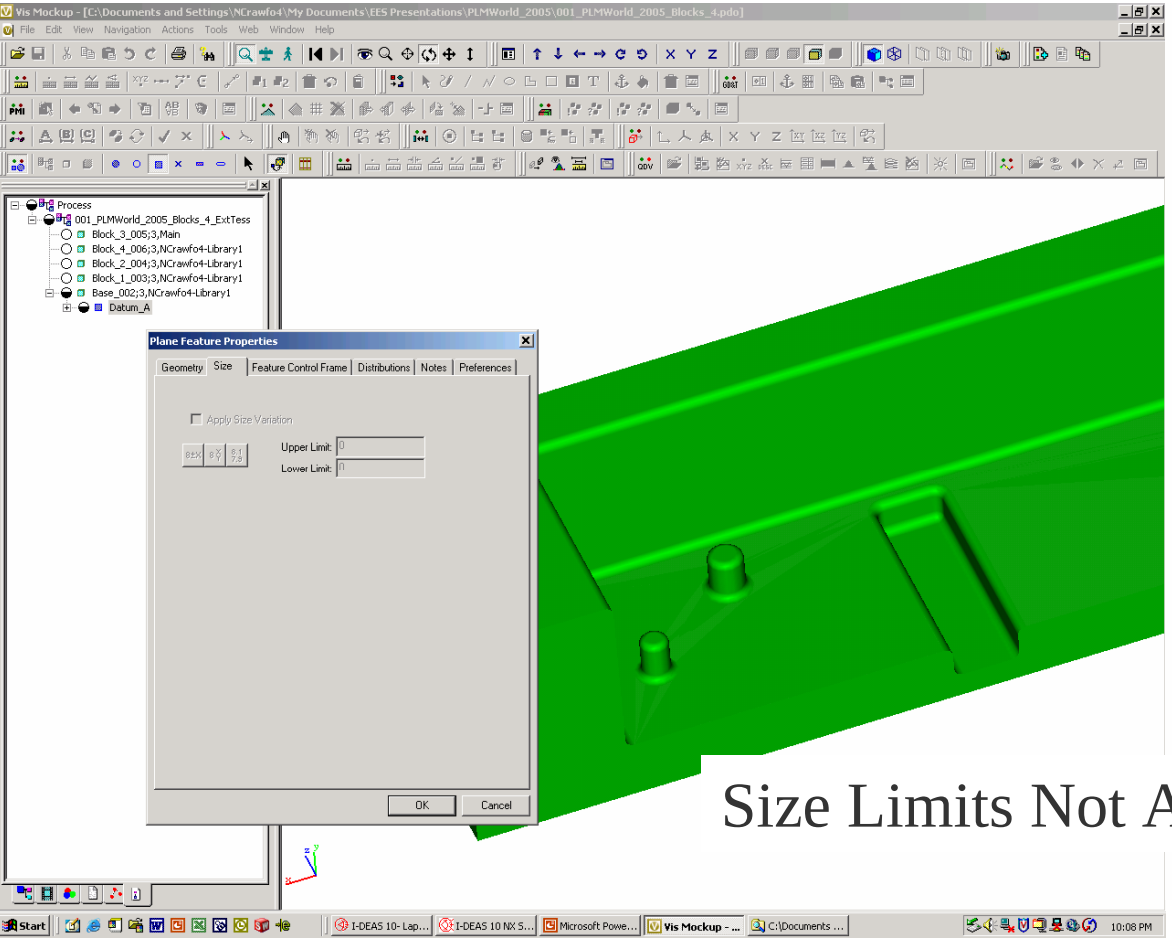

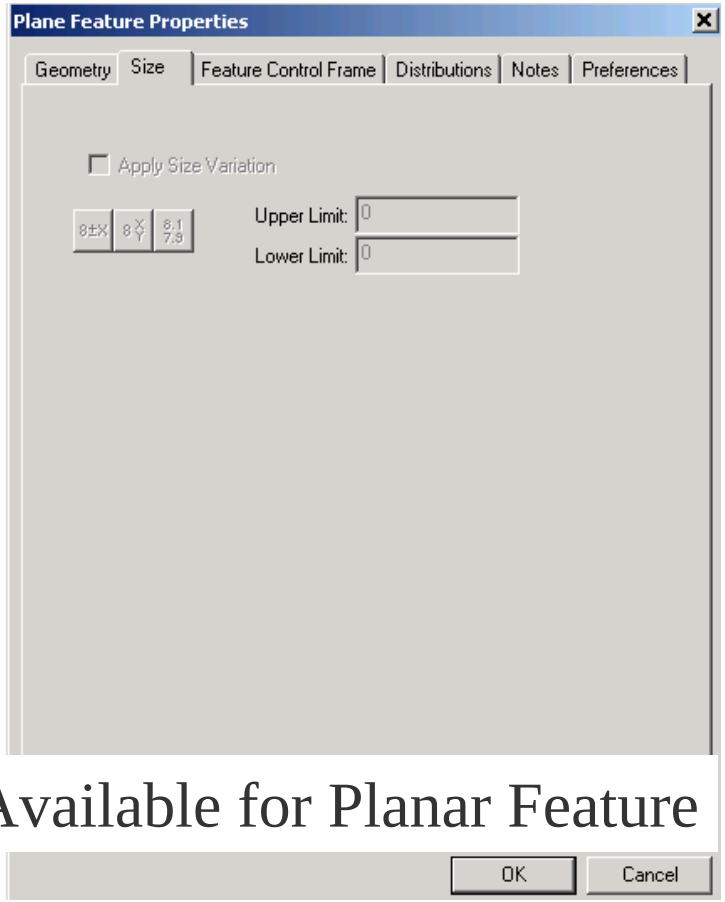

Size Limits Not Available for Planar Feature

GEOMETRIC SOLUTIONS

WALTONEN ENGINEERING

VisVSA Feature Control Frame Tab Default Form Tolerance Set By User

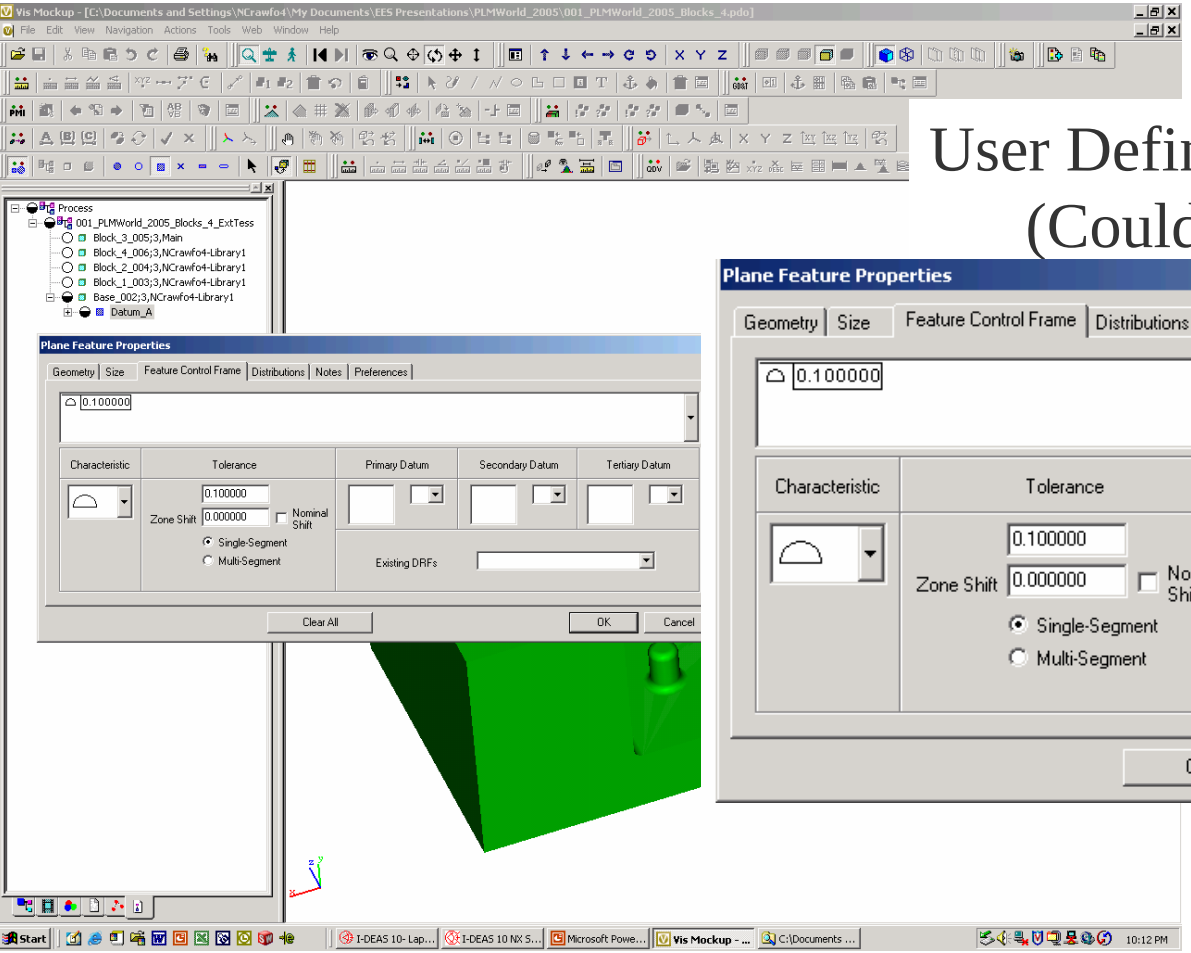

User Defined Default for Planes
(Could Be Flatness Too)

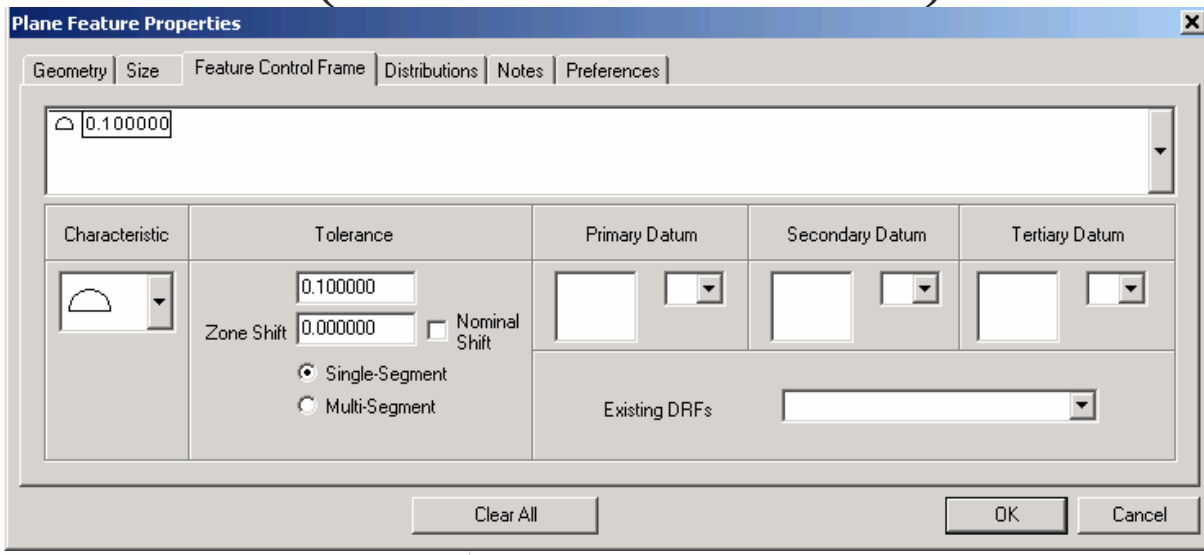

GEOMETRIC SOLUTIONS

WALTONEN ENGINEERING

VisVSA: Quickly Select Other Characteristic Besides Default

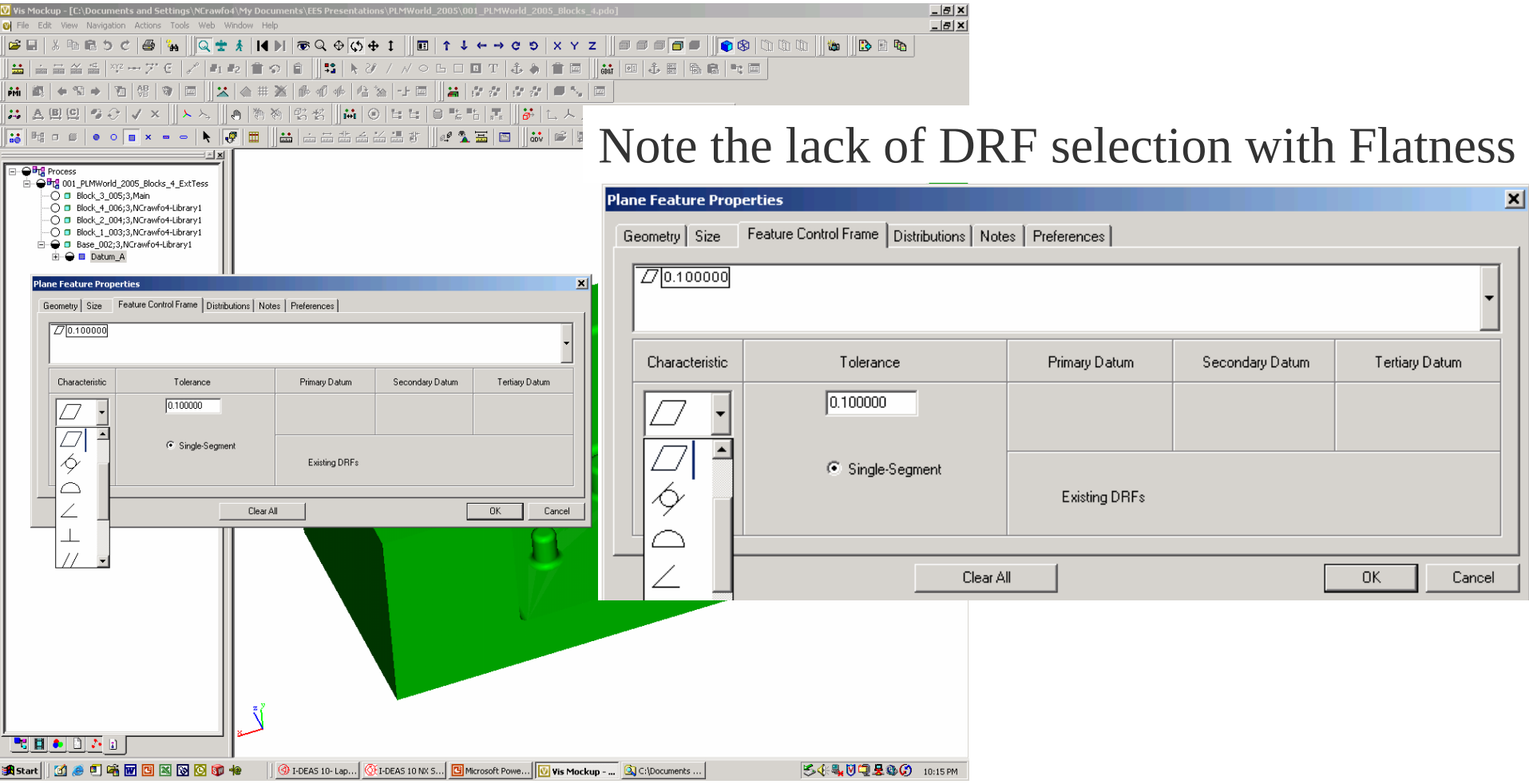

Note the lack of DRF selection with Flatness

GEOMETRIC SOLUTIONS

WALTONEN ENGINEERING

VisVSA: Example of Visual Display

Datum Features are not Perfect!
Analysis Tool Forces Consideration for Tolerance

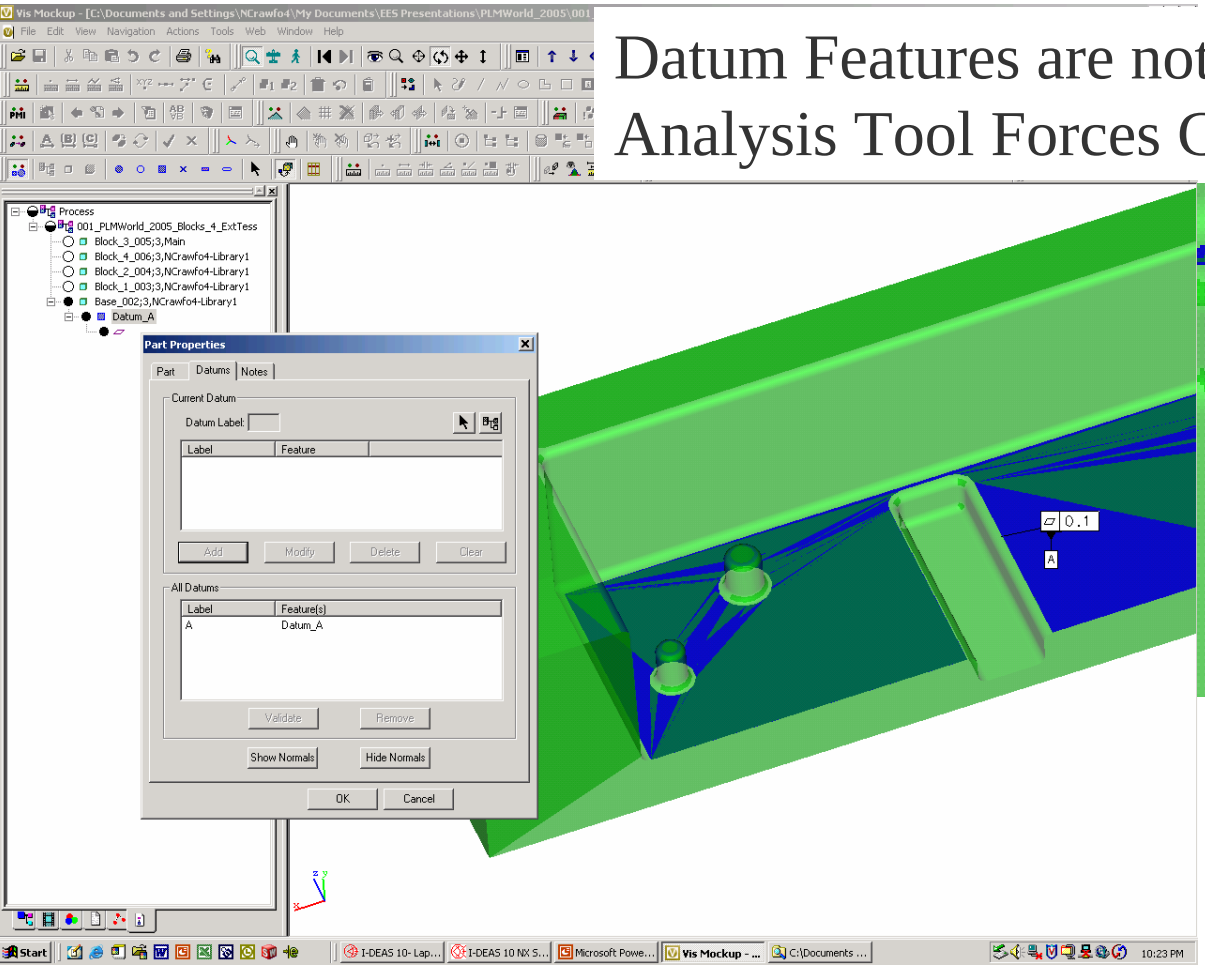

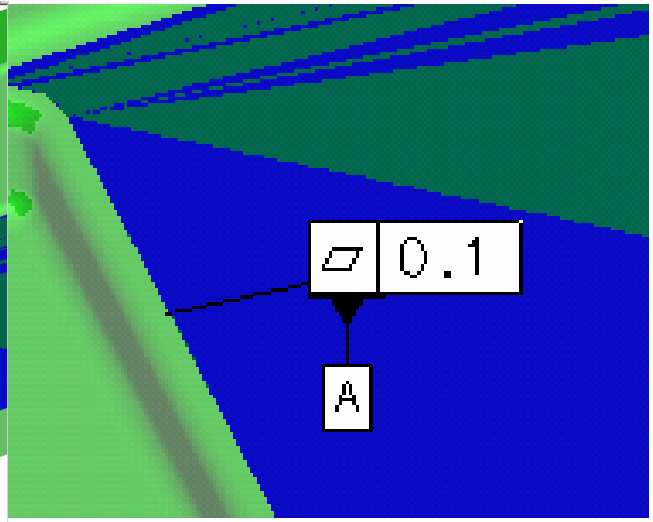

GEOMETRIC SOLUTIONS

WALTONEN ENGINEERING

VisVSA: Does Check GD&T Rules

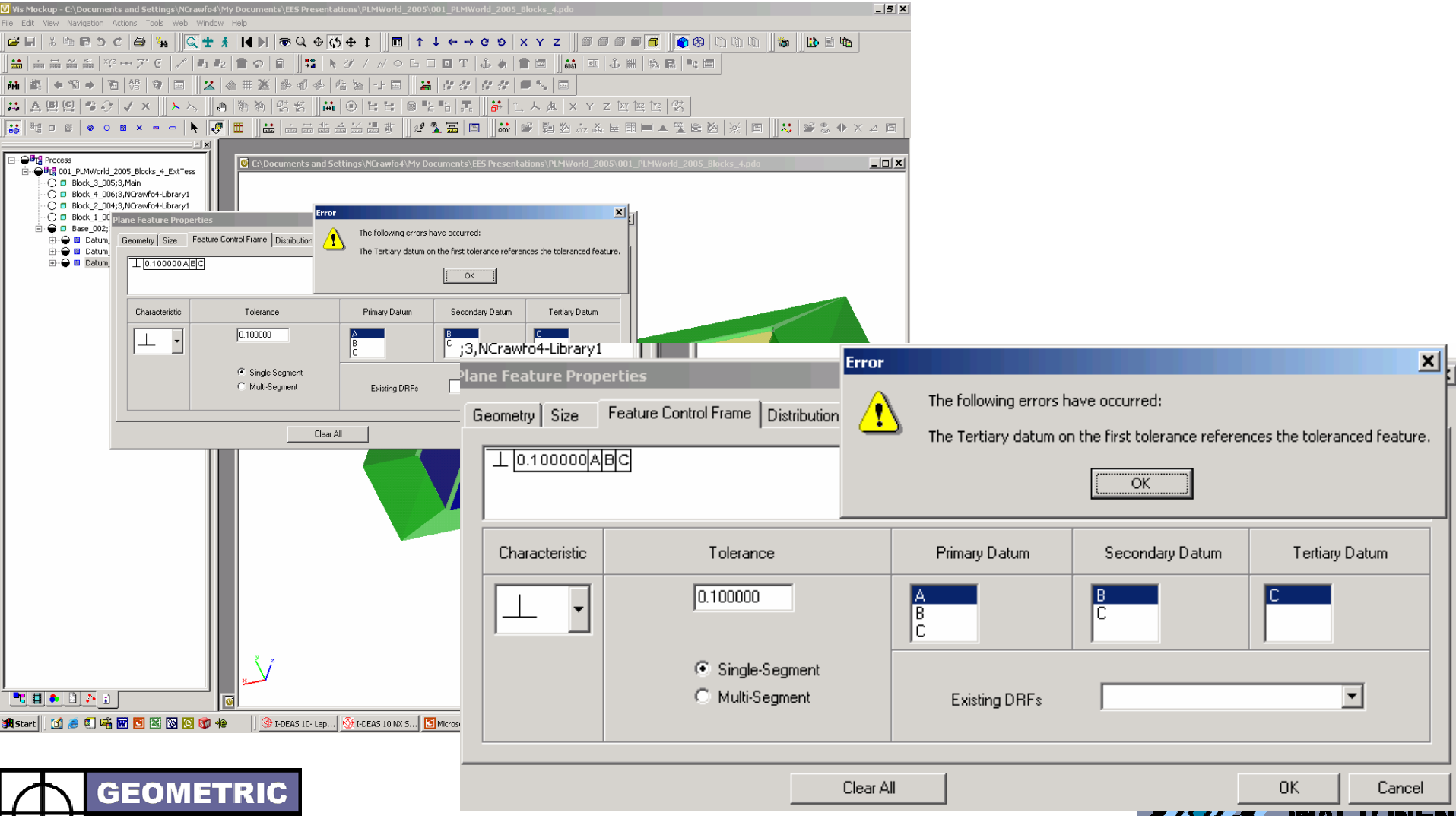

GEOMETRIC SOLUTIONS

WALTONEN ENGINEERING

VisVSA: Rules Support Provides Datums and Modifiers Only When Available

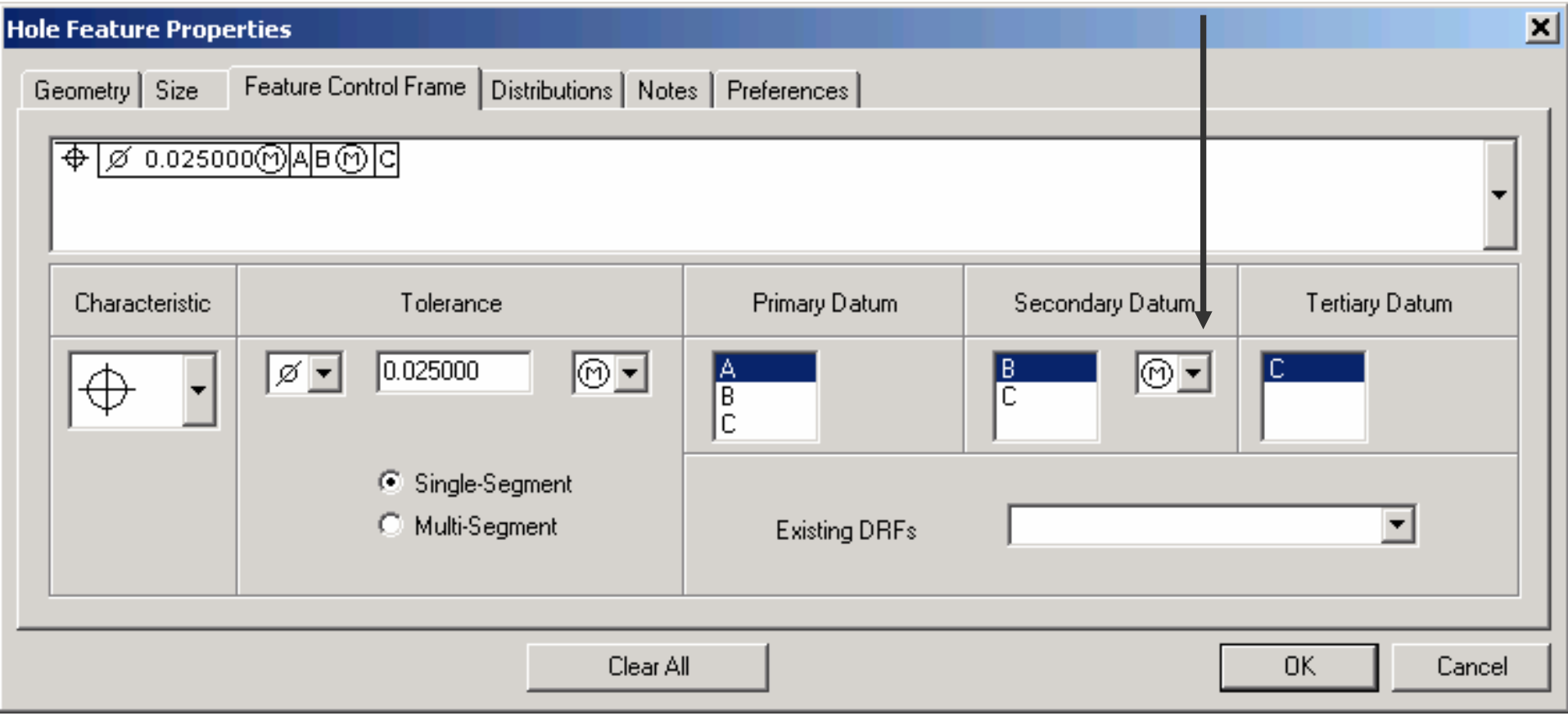

Material modifier for Feature of Size

Not Available on other Features

GEOMETRIC SOLUTIONS

WALTONEN ENGINEERING

VisVSA: Added Benefit of Checking CAD Model as “BASIC”

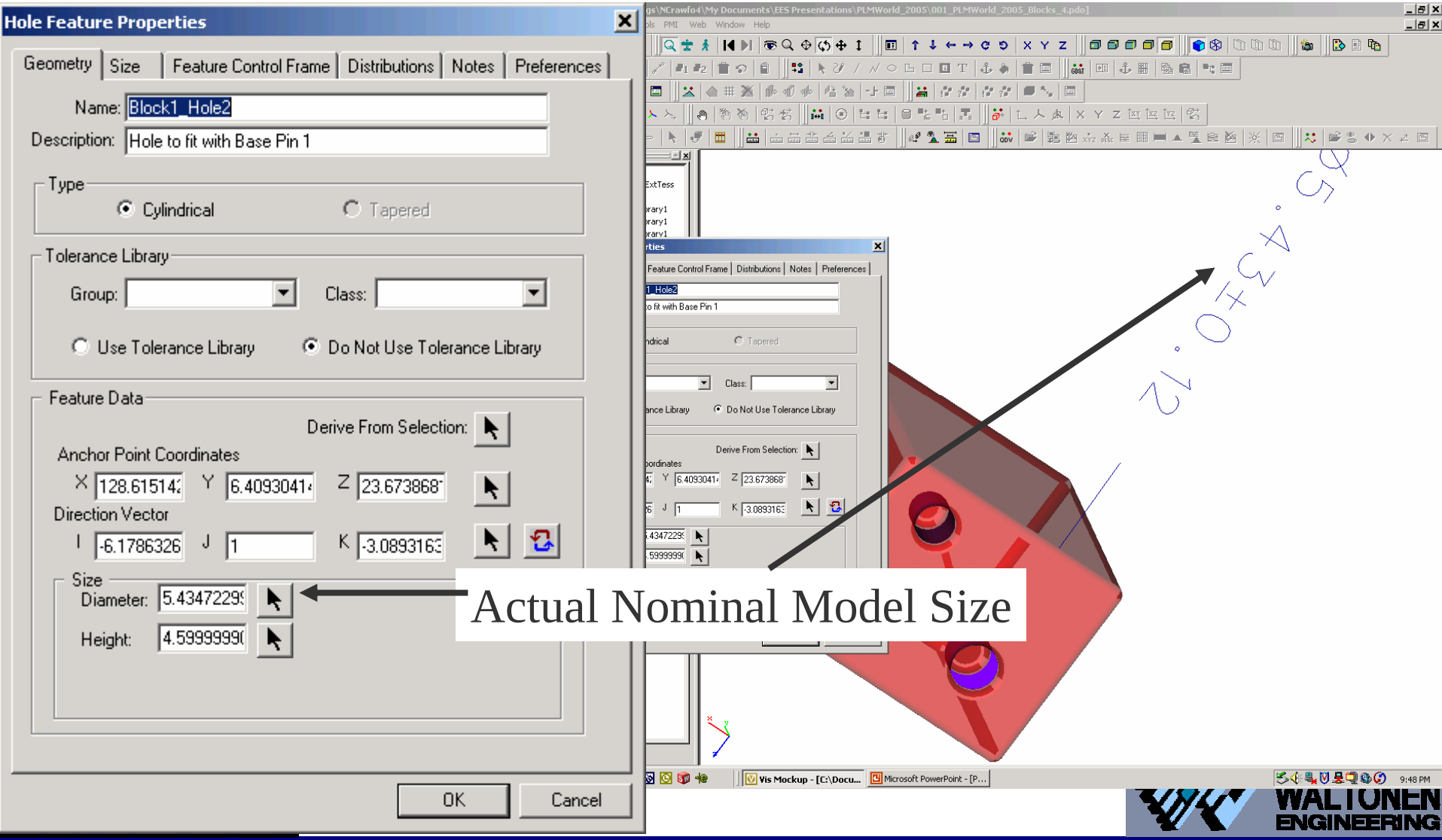

Use Visual Collaboration Tools to Communicate (VisView, VisMockup, TCCommunity, PDM)

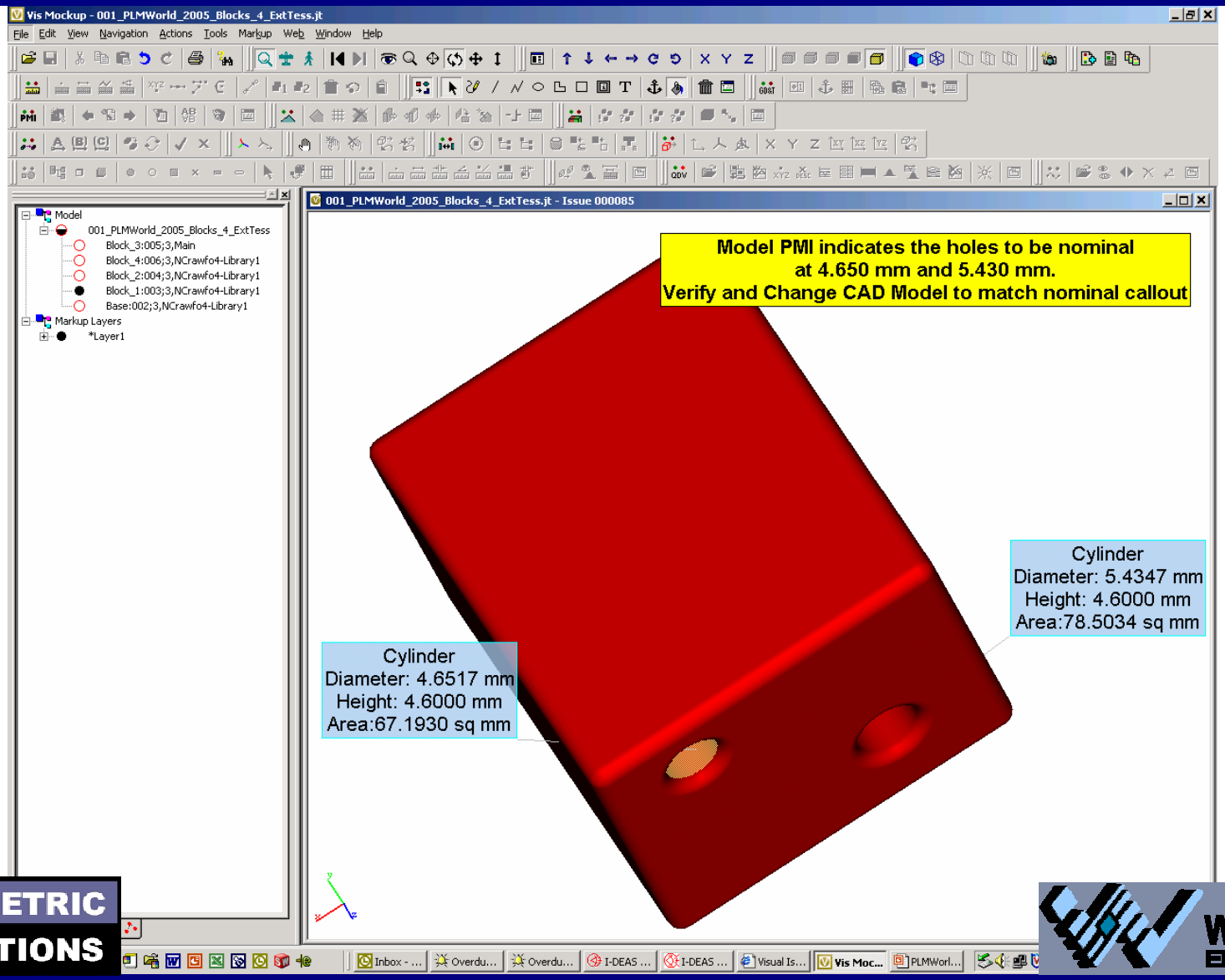

GEOMETRIC SOLUTIONS

WALTONEN ENGINEERING

Visual Animation and Refinements from TSV Input to VisVSA

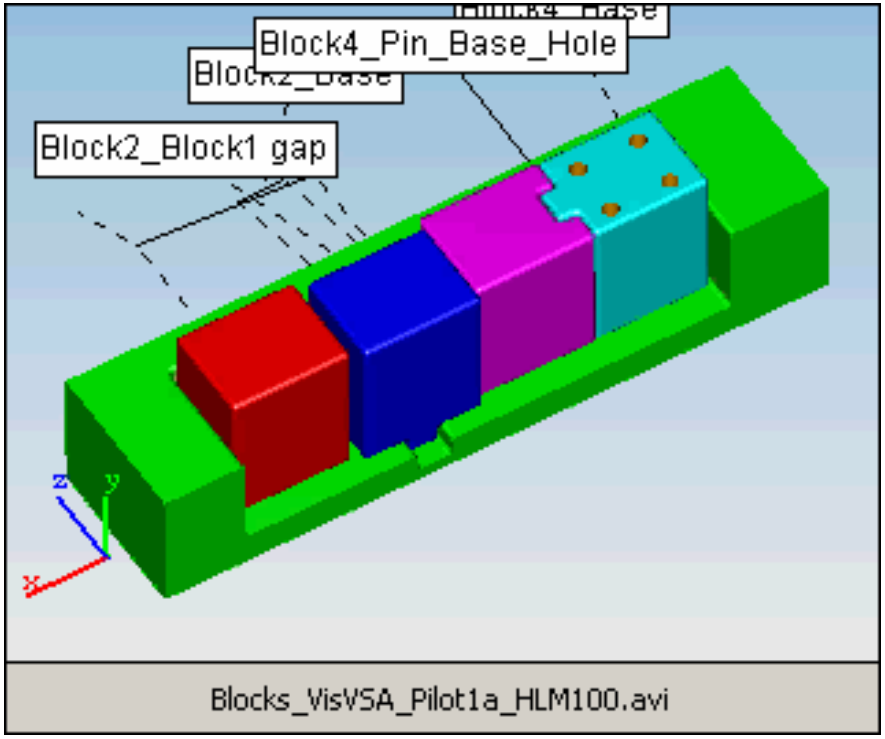

Direct Import From TSV

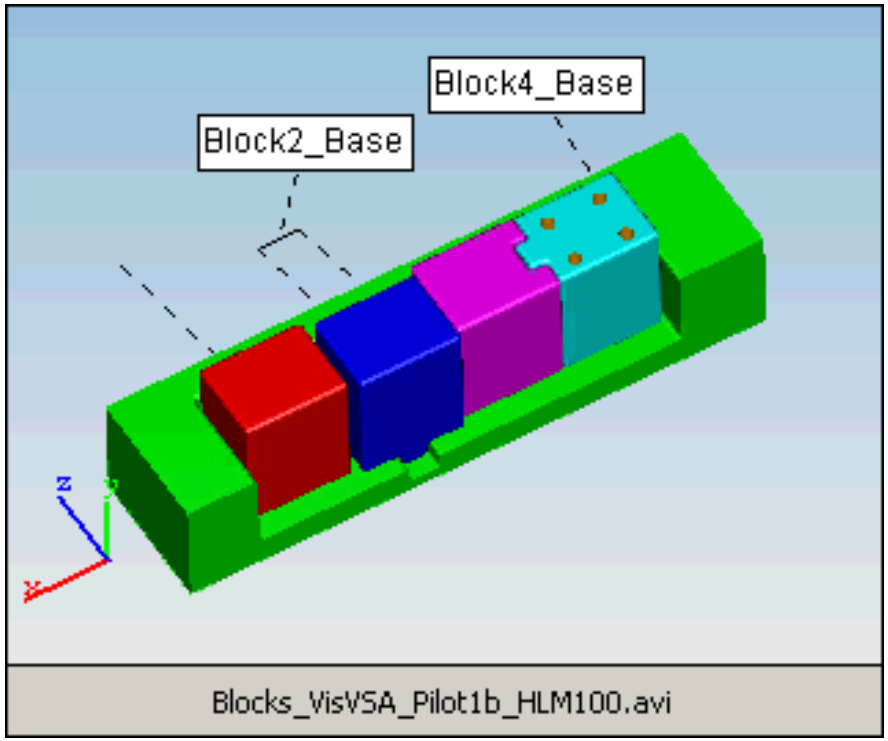

Some Refinement in VisVSA

VisVSA:
Example of Process and Contributor Reports

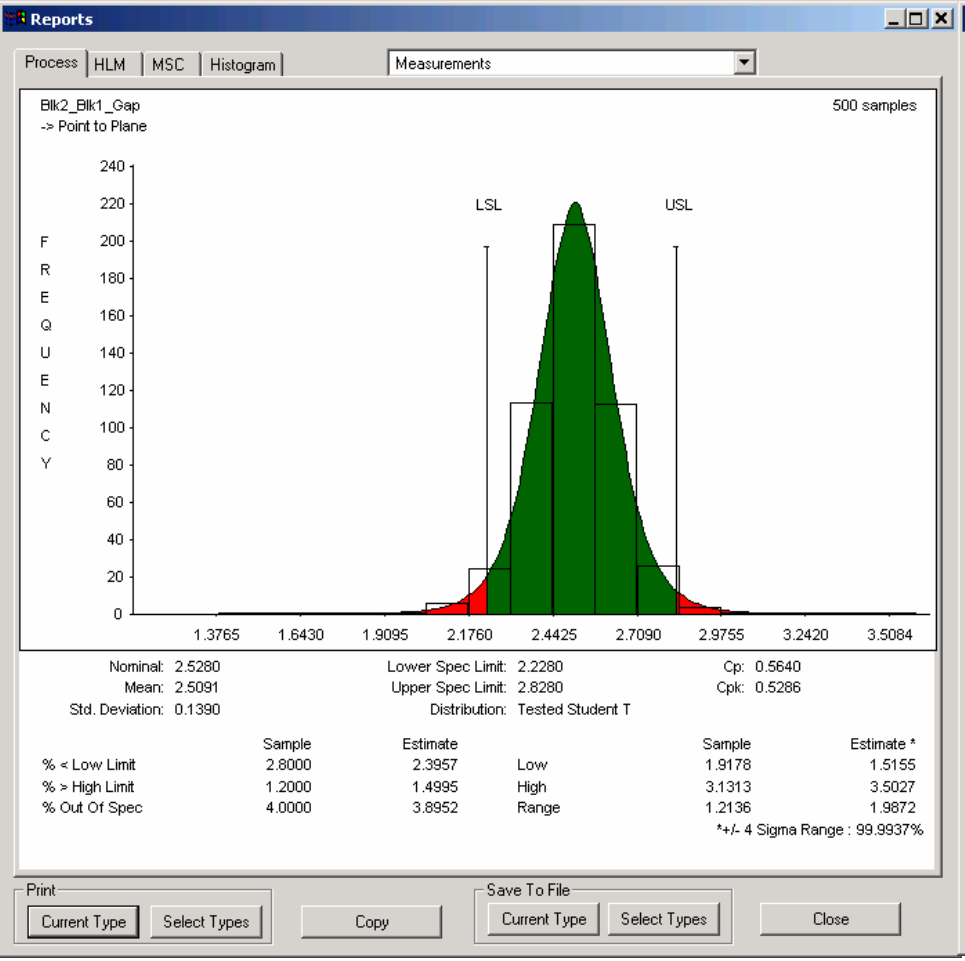

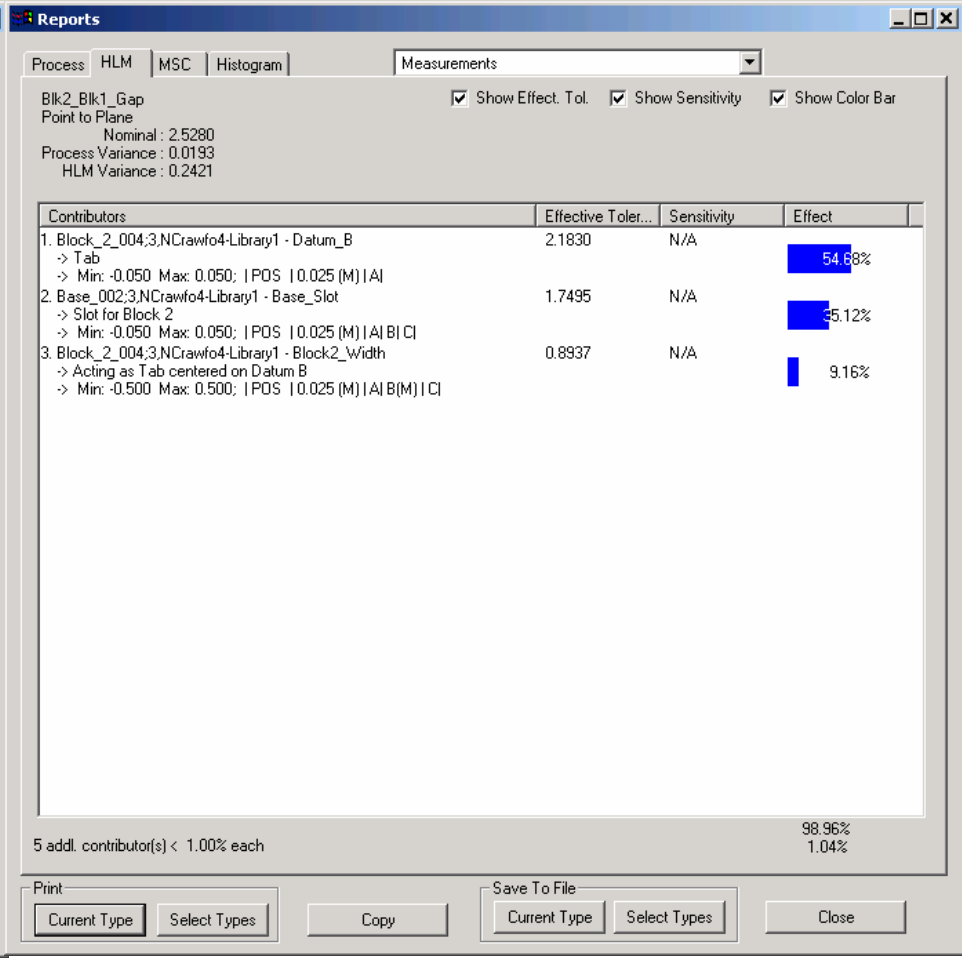

GEOMETRIC SOLUTIONS

WALTONEN ENGINEERING

VisVSA: Closer View of Contributor List and Available Table After Simulation

Reports

Process | HLM | MSC | Histogram

Measurements

☑ Show Effect. Tol. ☑ Show Sensitivity ☑ Show Color Bar

Blk2_Blk1_Gap
Point to Plane
Nominal : 2.5280
Process Variance : 0.0029
HLM Variance : 0.0192

Contributors	Effective Toler...	Sensitivity	Effect
1. Base_002;3,NCrawfo4-Library1 - Base_Slot -> Slot for Block 2 -> Min: -0.020 Max: 0.020; | POS | 0.000 (M) | A| B| C|	0.5656	N/A	46.35%
2. Block_2_004;3,NCrawfo4-Library1 - Block2_Width -> Acting as Tab centered on Datum B -> Min: -0.200 Max: 0.200; | POS | 0.050 (M) | A| B(M) | C|	0.3875	N/A	21.75%
3. Block_2_004;3,NCrawfo4-Library1 - Datum_B -> Tab to fit slot in base -> Min: -0.010 Max: 0.010; | POS | 0.000 (M) | A|	0.3597	N/A	18.74%
4. Block_1_003;3,NCrawfo4-Library1 - Block1_EndPlane -> | SPF | 0.300 | A| B| C|	0.2250	1.0000	7.33%
5. Block_1_003;3,NCrawfo4-Library1 - Block1_Hole1 -> Hole1 to fit Base Pin 1 -> Min: -0.120 Max: 0.120; | POS | Dia 0.025 (M) | A| B| C|	0.1731	N/A	4.34%

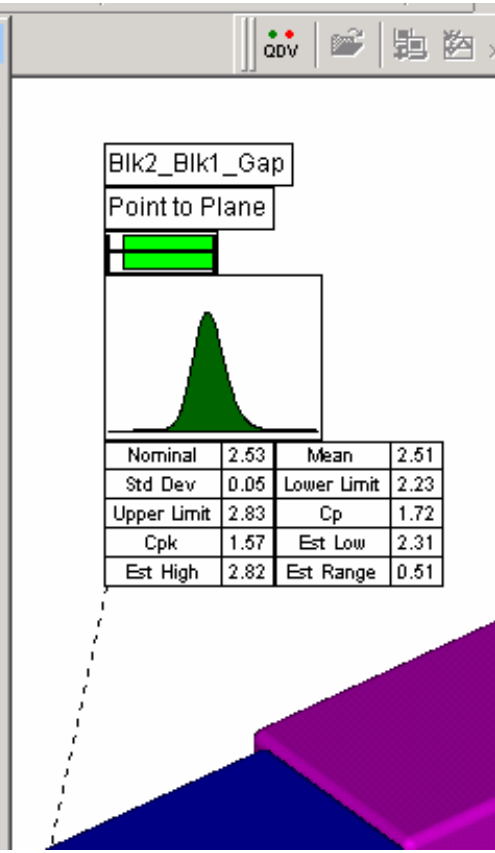

Summary Why VisVSA after TSV More Tools for Robust Tolerance Model

- Kinematic Assembly Operations (Configurations)
- Kinematic Analysis
- Custom and Conditional Assembly Operations
- Custom Measurements
- Tolerance Library for Material and Process Tolerance Standards
- Greater Reporting Flexibility
- Enhanced downstream use in additional Dimensional Management Tools
  - FEA – understand tolerance of flexible parts under load
  - VisQuality – Higher Value from Point Cloud and SPC Data
  - VisPublish – Visual and Linked Technical Publications
- Outside of CAD Environment
  - JT Format
  - Leverage Global Visual Collaboration / PDM Investment

Dimensional Management Technology and Process Track

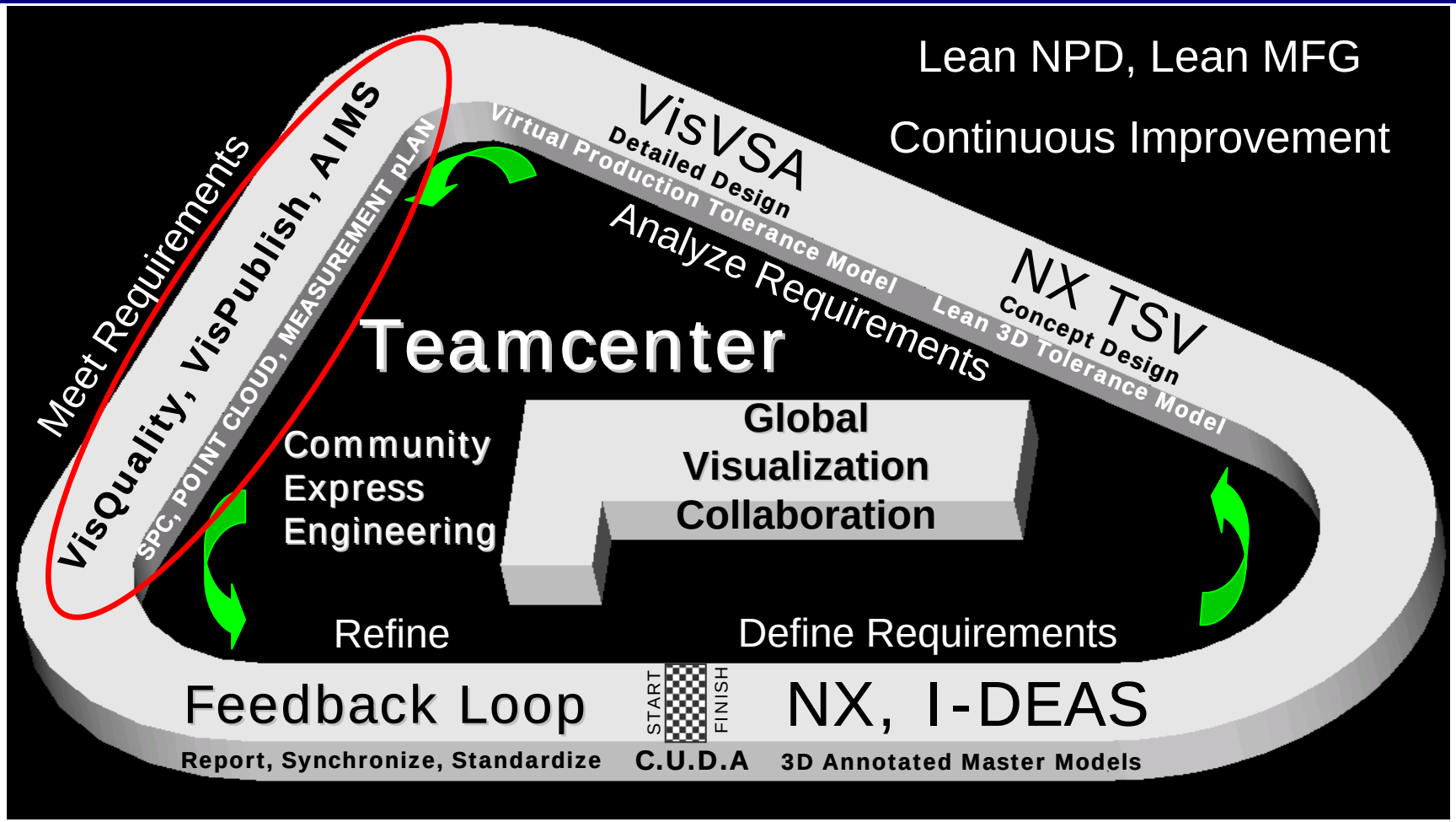

Communicate, Understand, Decide, Act

GEOMETRIC SOLUTIONS

WALTONEN ENGINEERING

VisQuality:
View Linked SPC Data to 3D Model

- Monitor, Analyze, Resolve Production Quality
- Communicate SPC Results
- Point Cloud Data also a Viewable Option

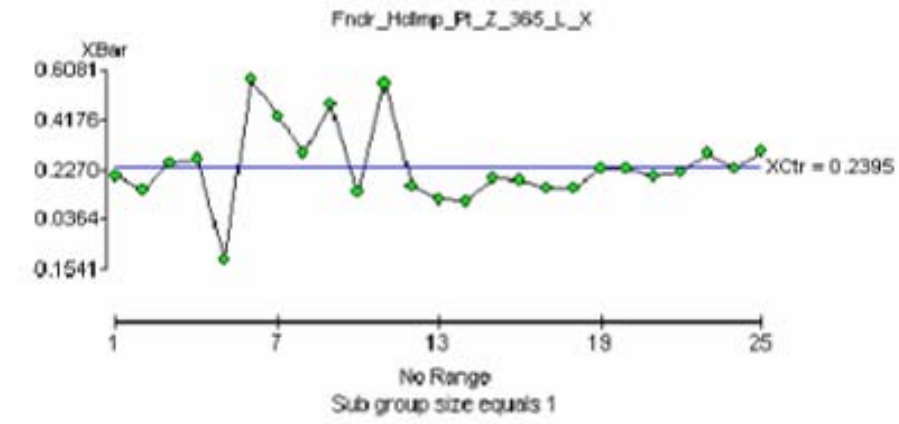

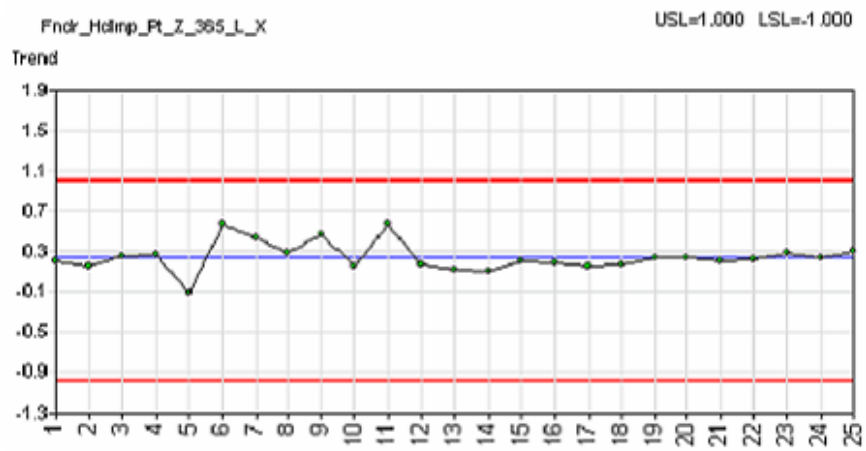

Control Charts

Trend Charts

Histograms

Process Reports

GEOMETRIC SOLUTIONS

WALTONEN ENGINEERING

VisQuality:
Trend Charts of SPC Data

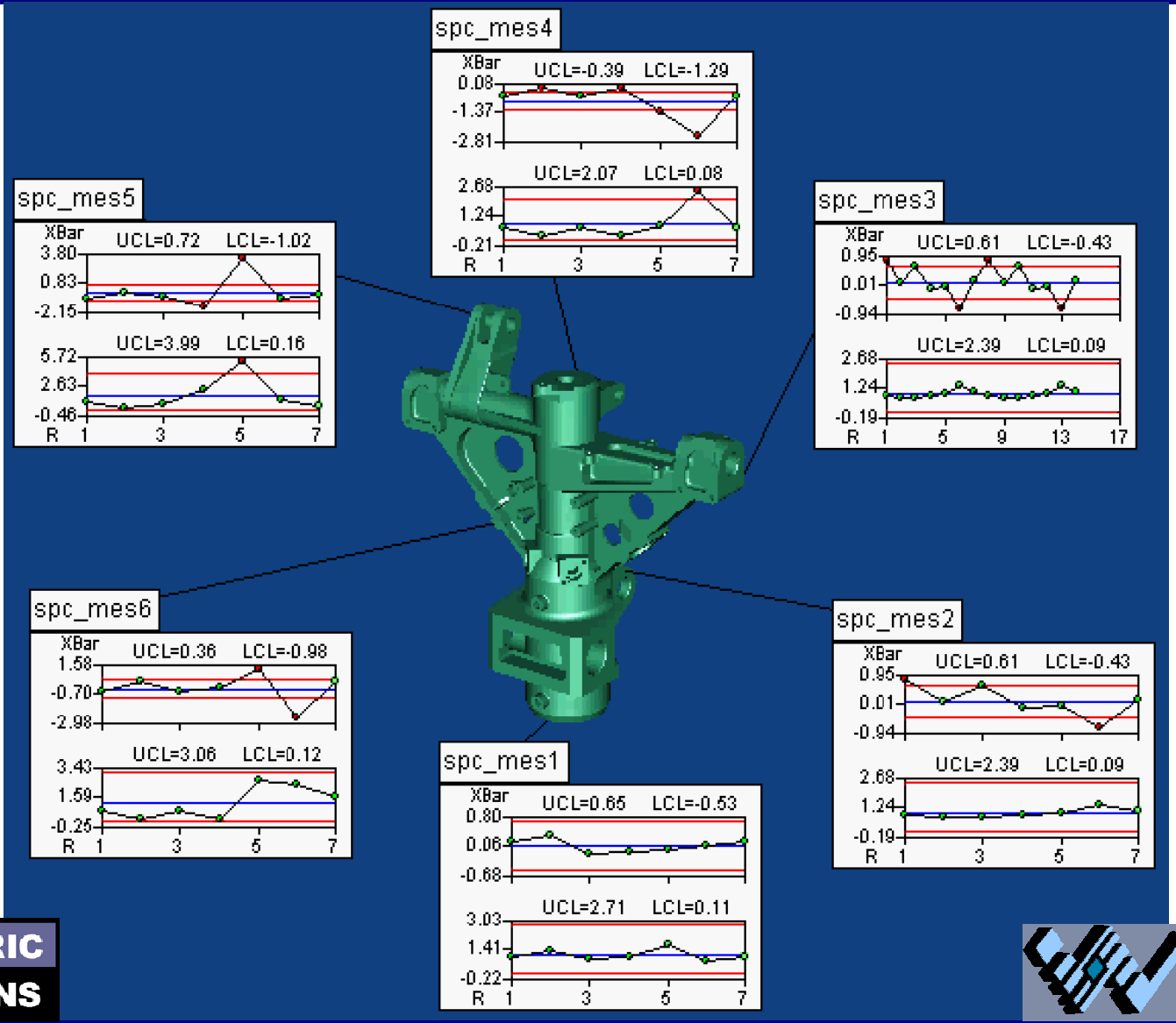

GEOMETRIC SOLUTIONS

WALTONEN ENGINEERING

VisQuality:
Tables of SPC Data

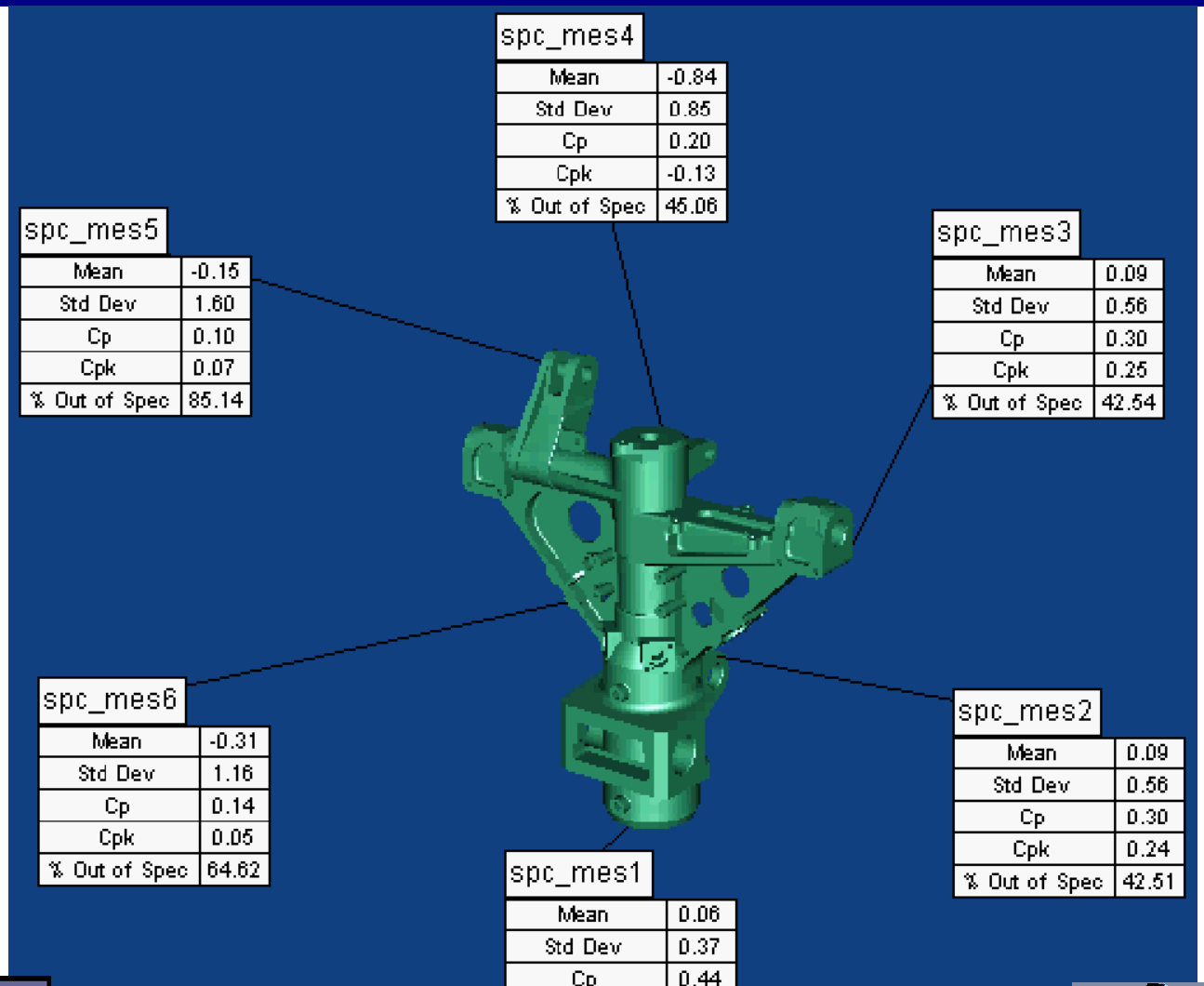

spc_mes4

Mean	-0.84
Std Dev	0.85
Cp	0.20
Cpk	-0.13
% Out of Spec	45.06

spc_mes5

Mean	-0.15
Std Dev	1.60
Cp	0.10
Cpk	0.07
% Out of Spec	85.14

spc_mes3

Mean	0.09
Std Dev	0.56
Cp	0.30
Cpk	0.25
% Out of Spec	42.54

spc_mes6

Mean	-0.31
Std Dev	1.16
Cp	0.14
Cpk	0.05
% Out of Spec	64.62

spc_mes2

Mean	0.09
Std Dev	0.56
Cp	0.30
Cpk	0.24
% Out of Spec	42.51

spc_mes1

Mean	0.06
Std Dev	0.37
Cp	0.44
Cpk	0.39
% Out of Spec	19.04

GEOMETRIC SOLUTIONS

WALTONEN ENGINEERING

VisQuality:
Histograms of SPC Data

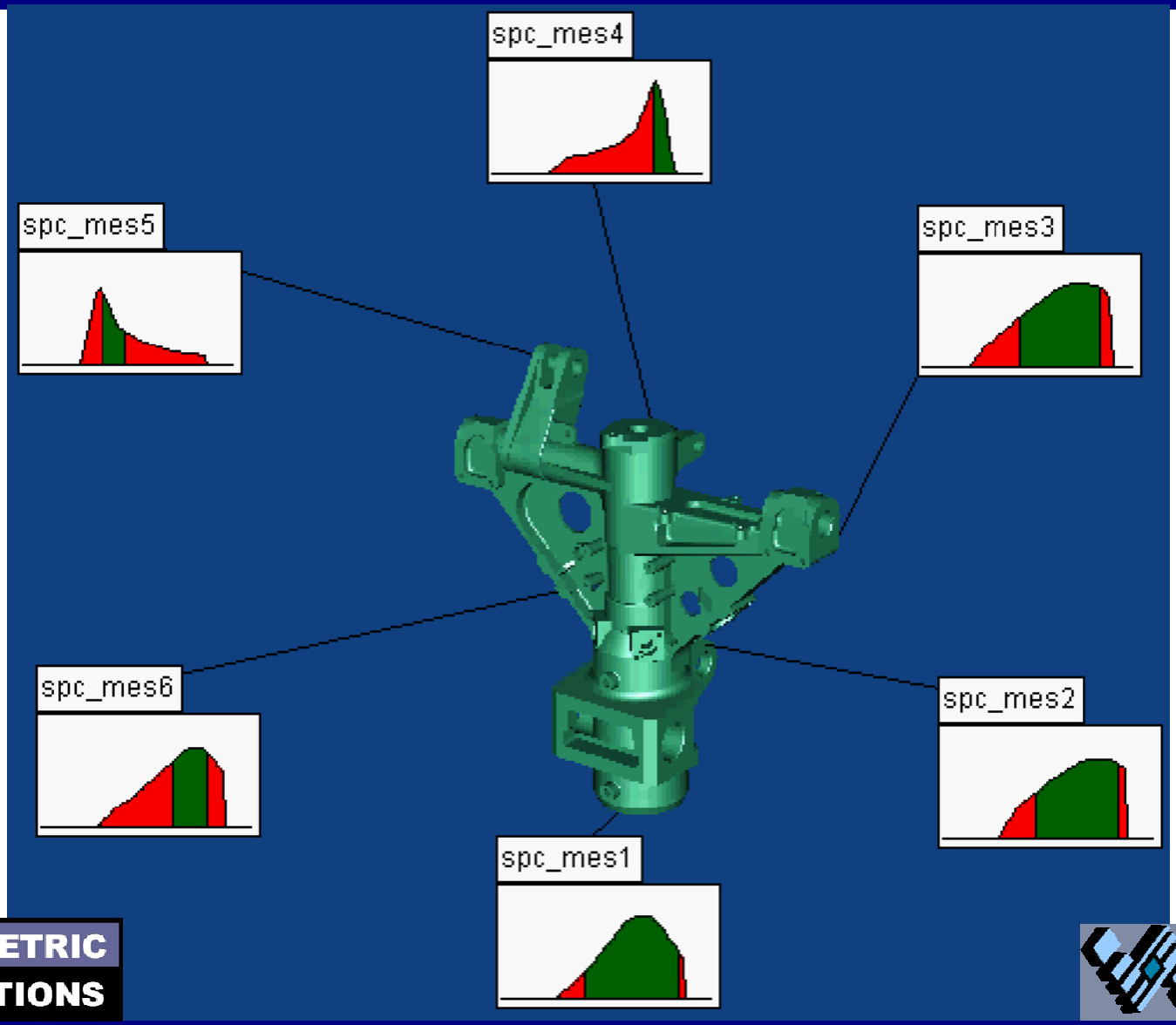

GEOMETRIC SOLUTIONS

WALTONEN ENGINEERING

VisPublish UGS AVI Demonstration Similarly Can Use VisVSA Files and Results

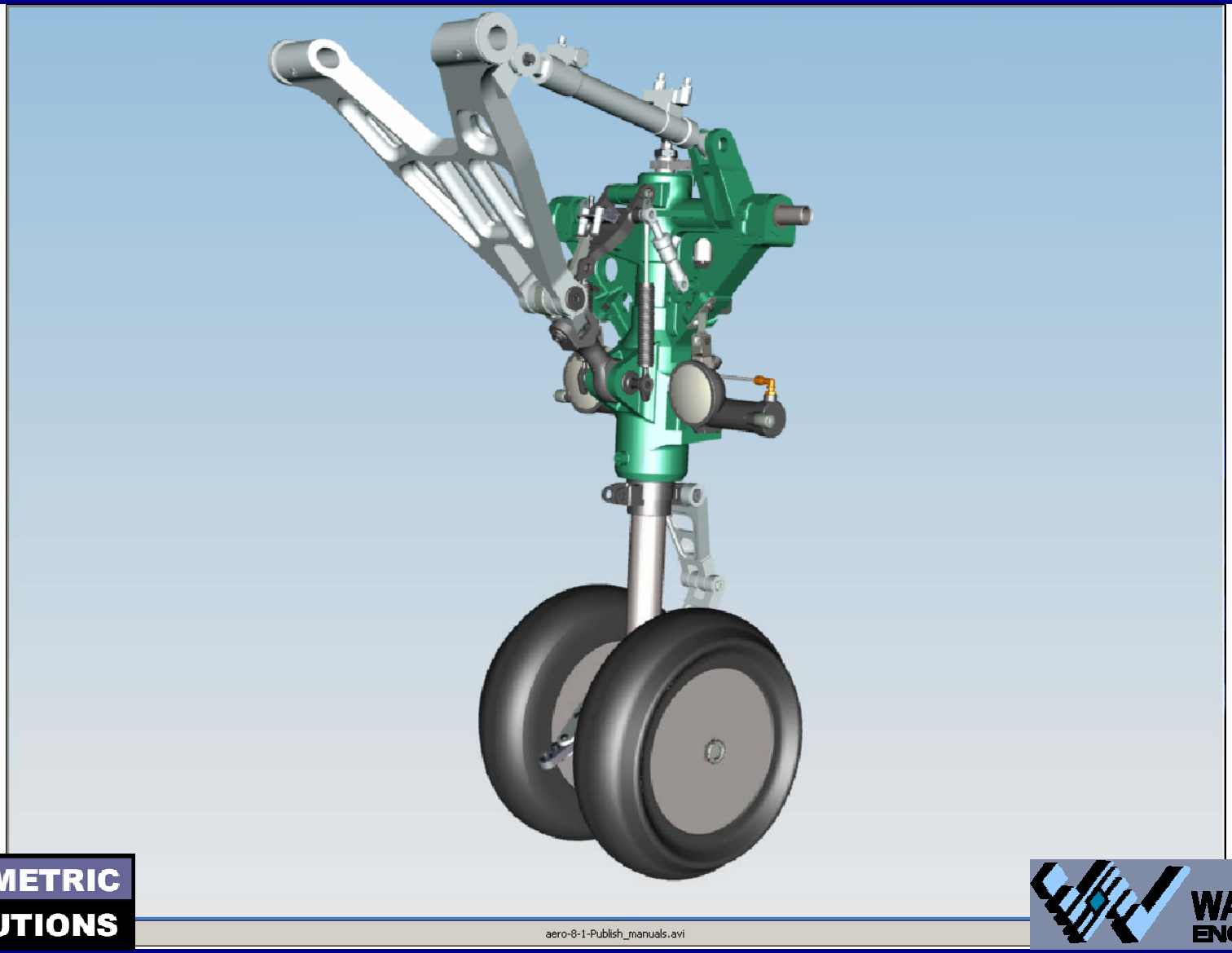

GEOMETRIC SOLUTIONS

WALTONEN ENGINEERING

VisPublish: VisVSA & VisQuality Linkage Automatic Report Updating

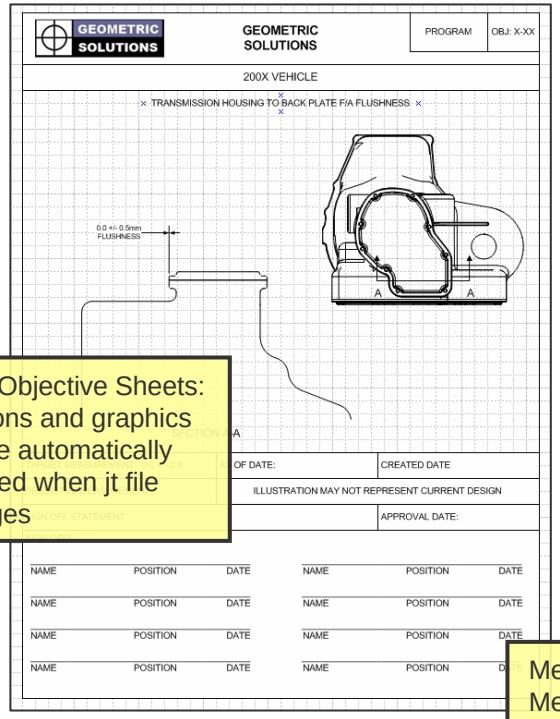

Build Objective Sheets: Sections and graphics can be automatically updated when jt file changes

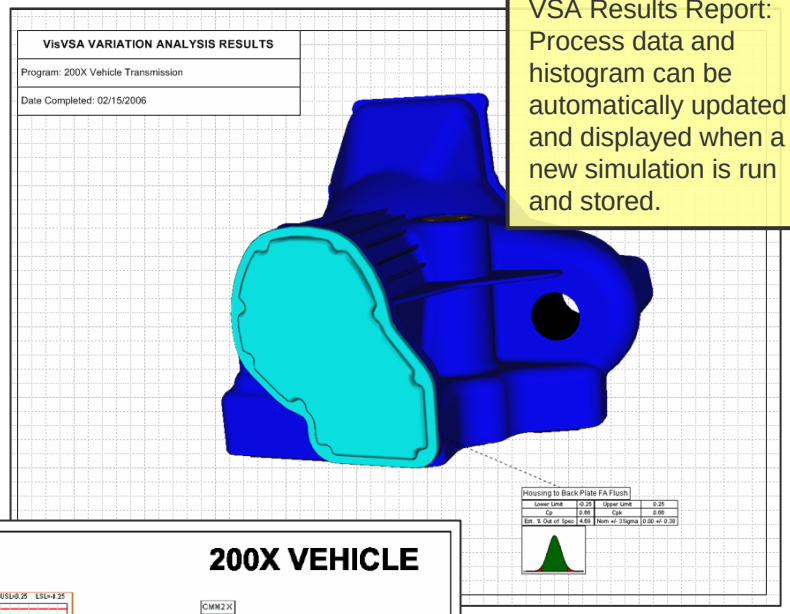

VSA Results Report: Process data and histogram can be automatically updated and displayed when a new simulation is run and stored.

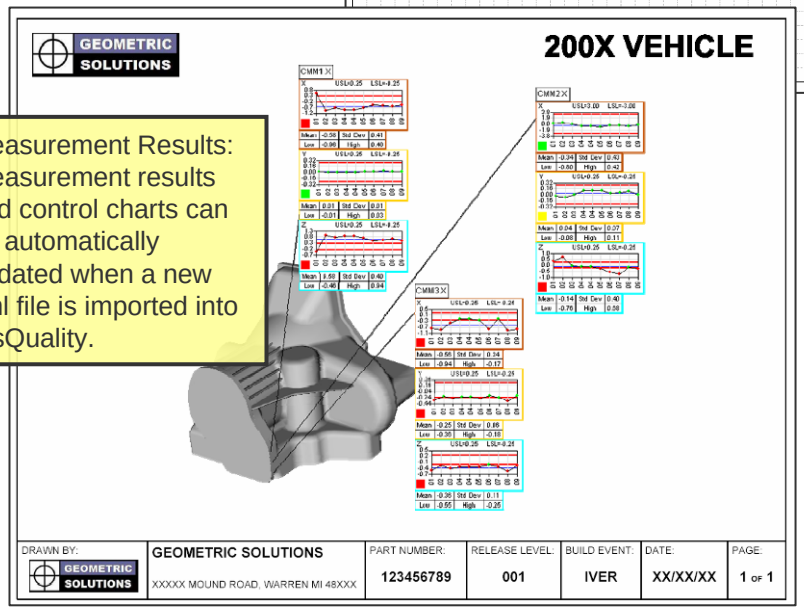

Measurement Results: Measurement results and control charts can be automatically updated when a new xml file is imported into VisQuality.

GEOMETRIC SOLUTIONS

WALTONEN ENGINEERING

AIMS: New High End 3D Measurement Process Integrated with 3rd Party Metrology

Generate Inspection Plan	CMM probe path program	Execution of Measurement Plan

Metrology software products normally cover all 3 functions
Proprietary Solutions / NO CAD environment

ZEISS

SAI

LK

SA

3DMIS

Metrix

pc-dmis

CheckMate

DELCAM
www.delcam.com

VERISURF

CappsNT

GEOMETRIC SOLUTIONS

WALTONEN ENGINEERING

The Aims Concept

Generate Inspection Plan	CMM probe path program	Execution of Measurement Plan

In "Any" CAD Environment

In "Any" Metrology Software Environment AIMS-Enabled

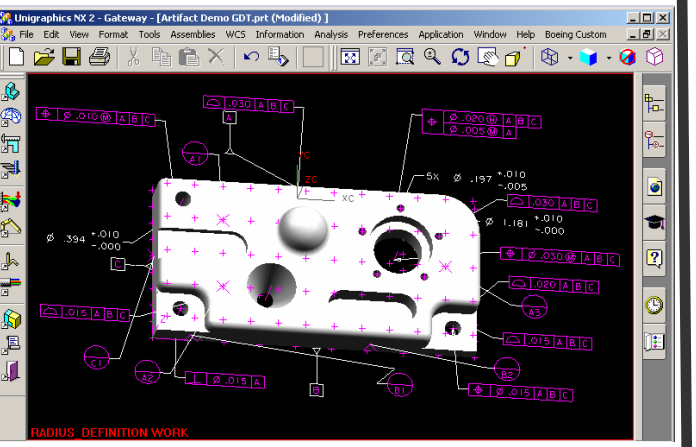

ZEISS

SAI

LK

SA

Metrix

pc-dmis

VDMIS

DELCAM
www.delcam.com

VERISURF

CheckMate

CappsNT

WALTONEN ENGINEERING

GEOMETRIC SOLUTIONS

AIMS: Geometry Assurance Process

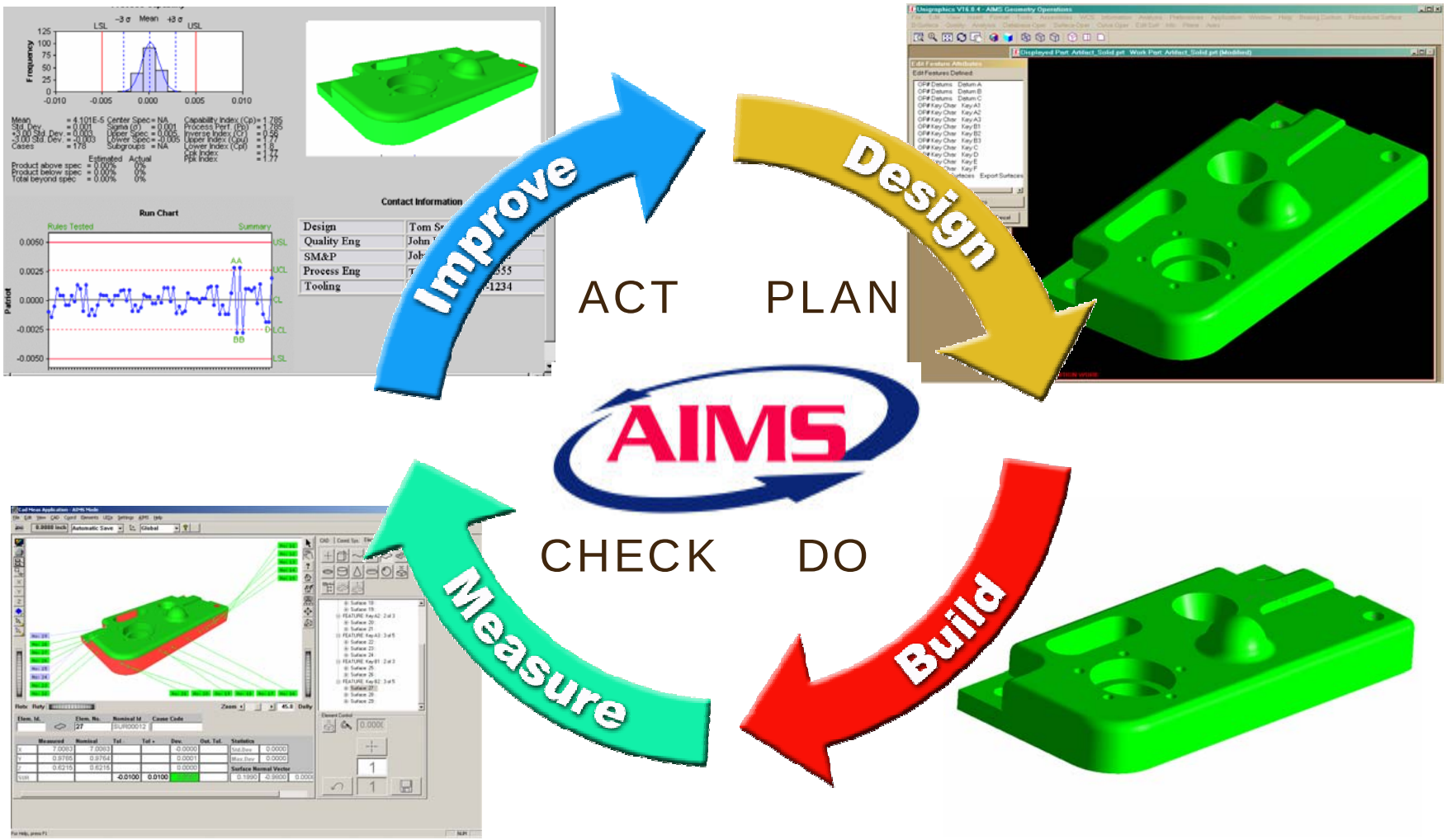

GEOMETRIC SOLUTIONS

WALTONEN ENGINEERING

Aims: Plan

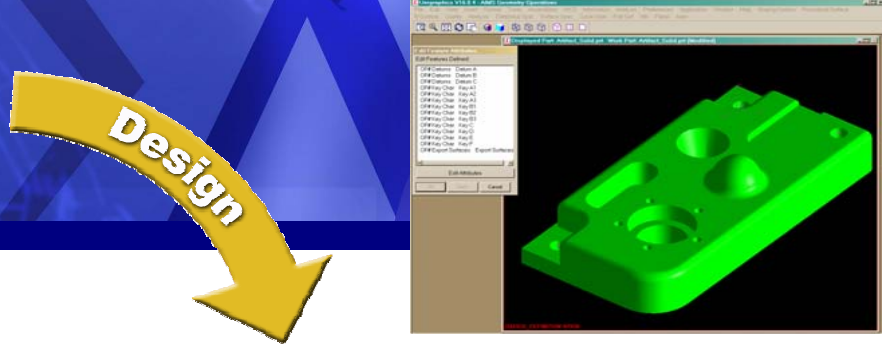

- Creation of AIMS Automated Feature-Based Assembly / Measurement / Inspection Plan
  - The Measurement Plan / Process Tree
    - CAD Part Definition (Geometry/Solids Representation)
    - Measurement Operations
    - Features
    - Key Characteristics
    - GD&T
    - Basic Tolerances
    - Automated Measurement Sequencing of Part
    - Others

AIMS: DO

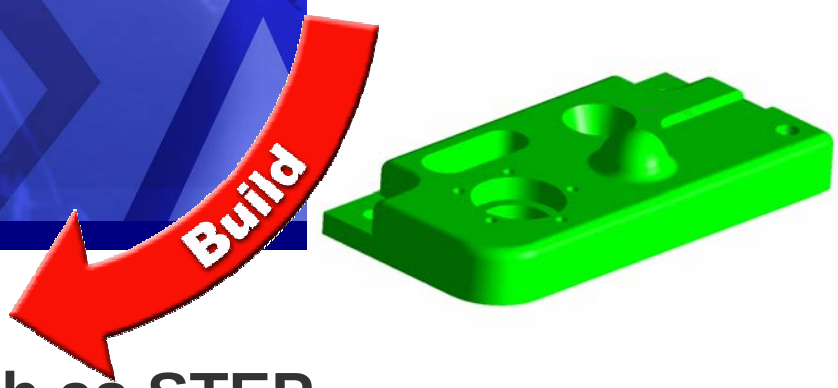

- AIMS avoids translators such as STEP, IGES or VDA
- Transferred Plan via the AIMS Model (TDF) from the CAD System for Use by the AIMS Metrology Kernel/API
- Open Architecture
  - AIMS is available across a number of software platforms for use on all your production and measurement equipment

AIMS CHECK

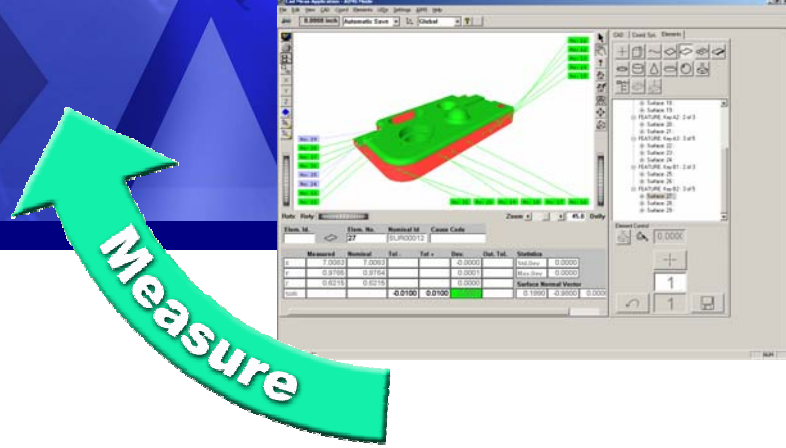

- **Simplified Inspection**
  - **The TDF file contains a step-by-step guided measurement plan that ensures all required data is measured – as Designed**
- **Real-time Part Buy-off**
  - **Web based data can be verified prior to shipping any parts – enabling pre-delivery acceptance and eliminating costly rejects**

AIMS ACT

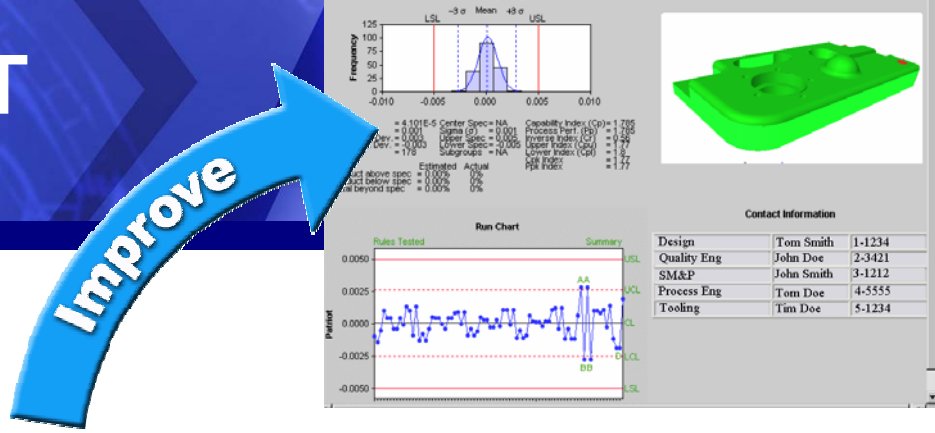

- Central Database
  - After measurement, TDF files hold CAD, GD&T and measurement data – all uploaded to the database and available for analysis
- New Program Planning
  - Detailed process capability analysis – by supplier, program, part number, feature & family
  - Helps you select the right suppliers and methods – in advance!

GEOMETRIC SOLUTIONS

WALTONEN ENGINEERING

AIMS Inspection Plan Generator

- **CAD Interfaces**
  - Creation of Plans in CAD (UG)
  - Export Plans for Use by AIMS Metrology Kernel/API
  - Import Results of Measurement Process CAD

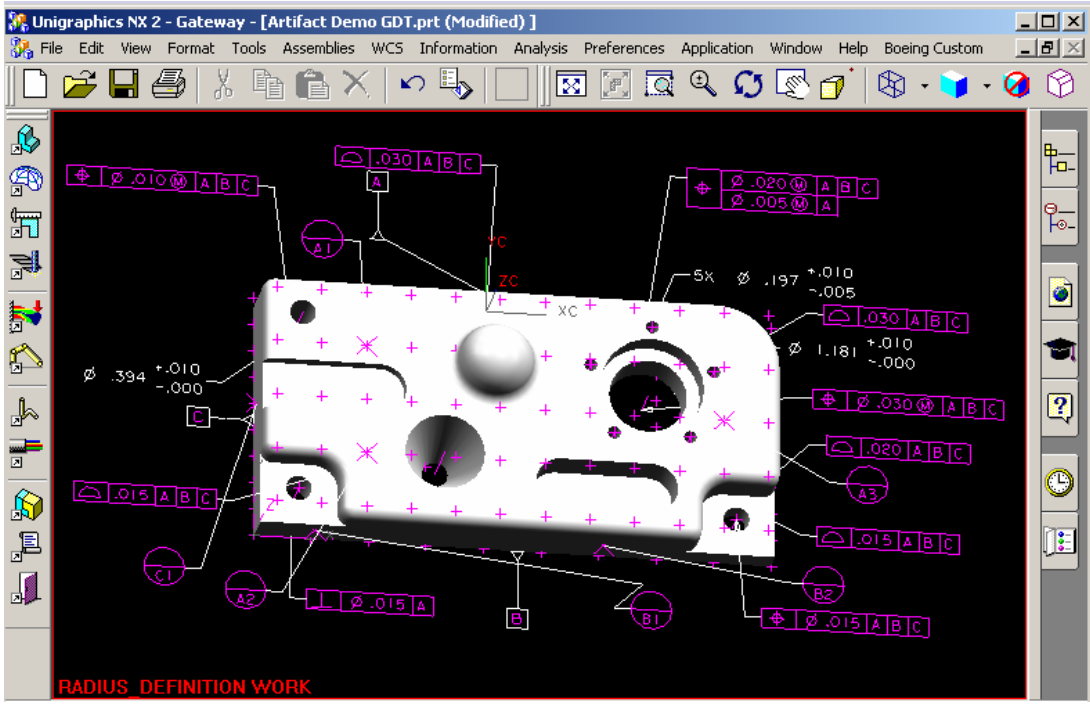

GEOMETRIC SOLUTIONS

WALTONEN ENGINEERING

AIMS Metrology Kernal/API

- Kernel and API Software that Allows Third-Party Metrology Software to Execute the Plans and Capture Measurement Results. Kernel/API can also be used to Create New Plans and Modify Existing Plans without a CAD System.

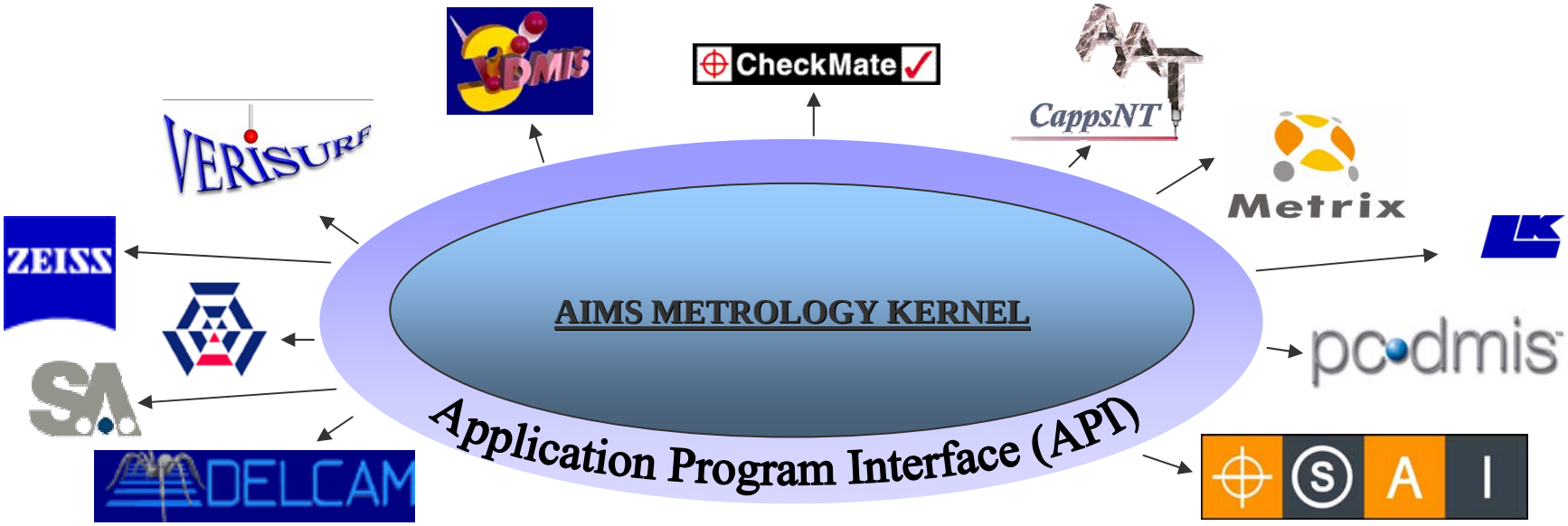

AIMS PCDMIS

FACTORY DATABASES
CAD MASTER MODEL DATABASES
pc-dmis crmm
pc-dmis inspection planner
pc-dmis vision
pc-dmis ems
pc-dmis DataPage/RT
pc-dmis nc
pc-dmis web reporter
pc-dmis portable
HEXAGON

Enterprise Process Capability Database (EPCDB)

- Permanent Storage of Process Capability Data and Relationships

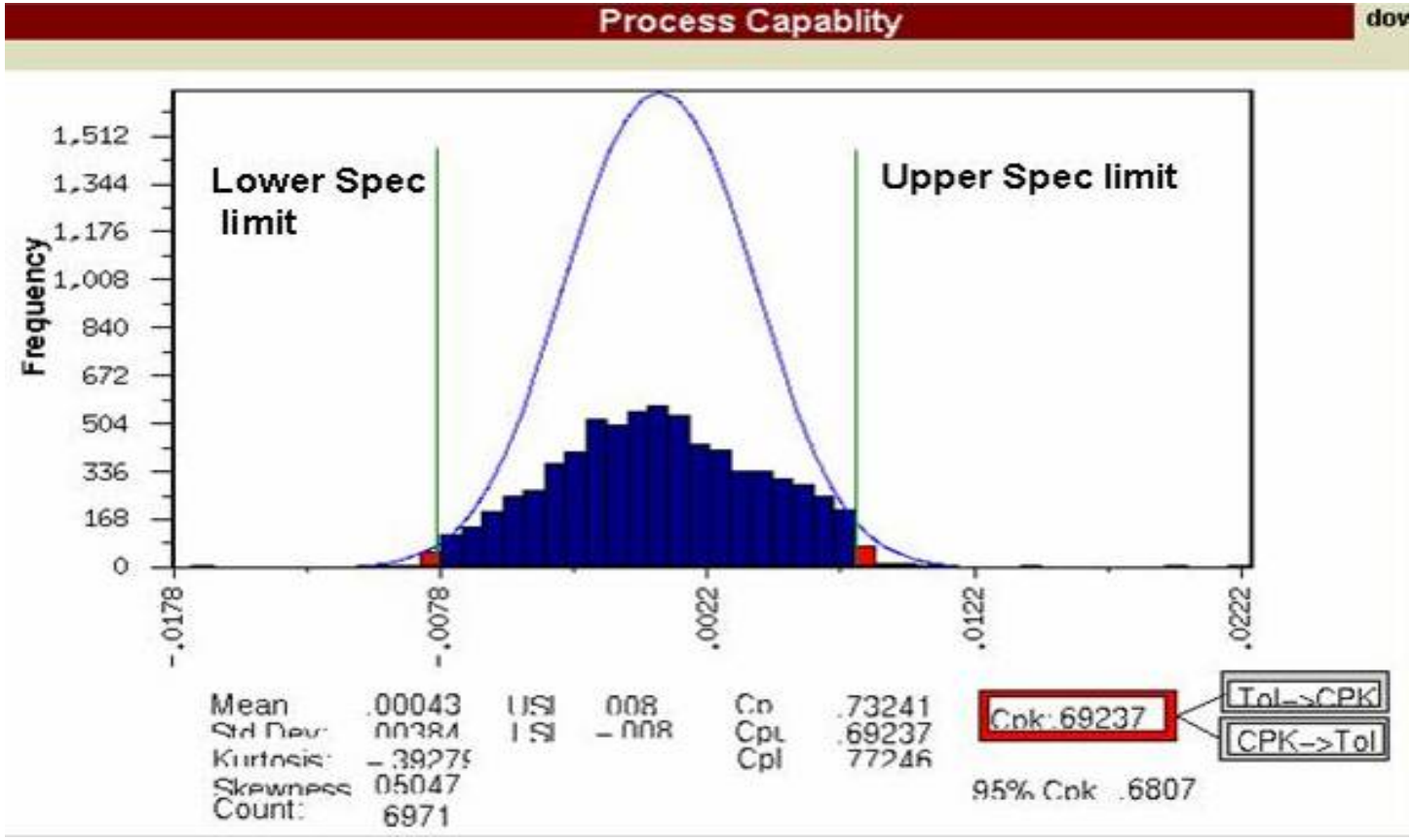

AIMS Web-based Reporting

- Producing Process Capability Charts and Graphs, from EPCDB Data and Relationships, Over the Web

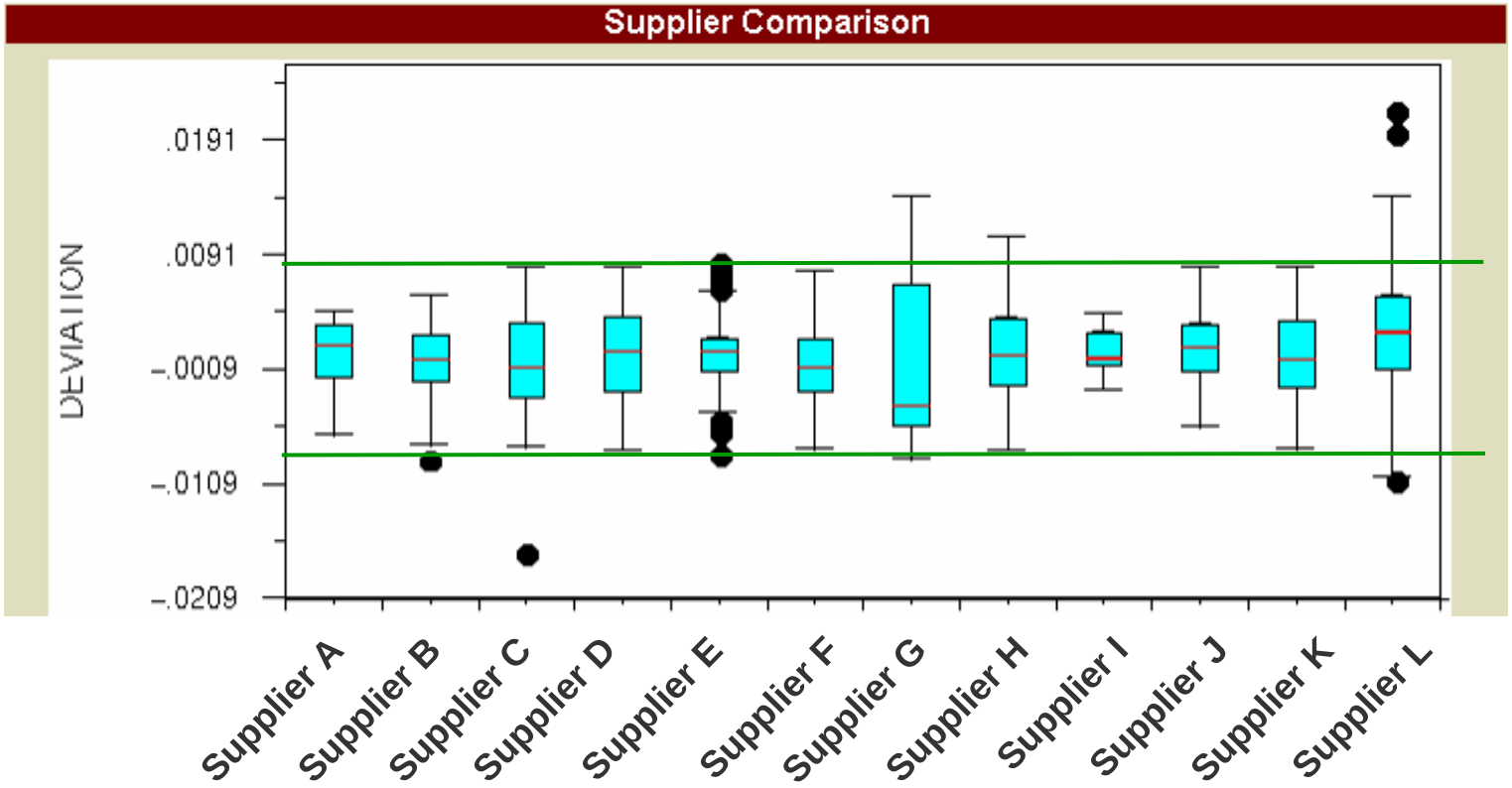

The Green lines are Specification limits

GEOMETRIC SOLUTIONS

WALTONEN ENGINEERING

AIMS SUMMARY

- **Global collaboration between program partners – one set of shared information**
- **Consistent Manufacturing Requirements -- Design thru Build**
- **Stable & Predictable Supply Chain Quality -- permitting pre-delivery buy-off**
- **Web-based Supplier Capability database & evaluation – tremendous insight into your Supply Chain**

AIMS SUMMARY

Dimensional Management Technology and Process

SUMMARY

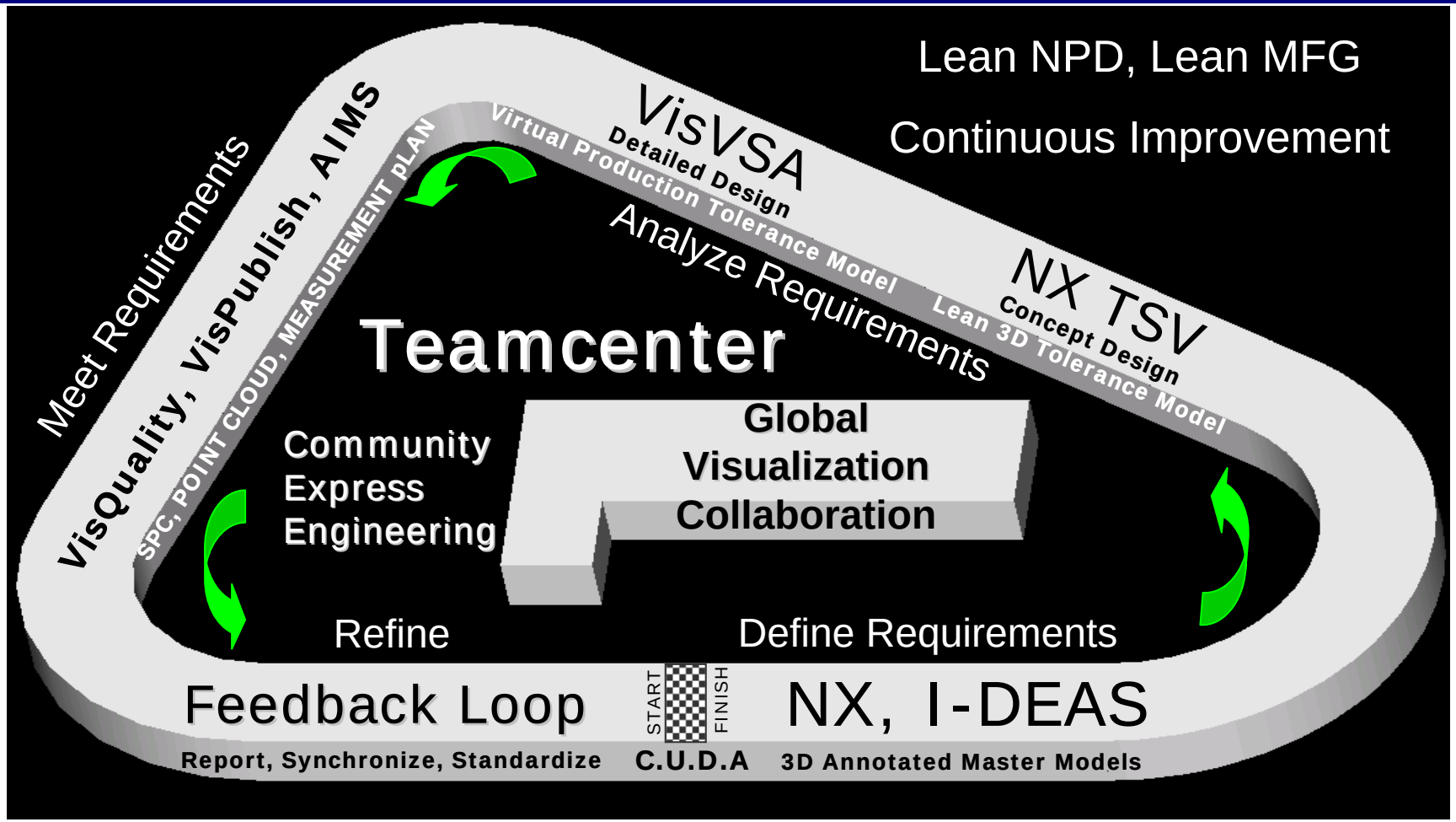

Communicate, Understand, Decide, Act

GEOMETRIC SOLUTIONS

WALTONEN ENGINEERING

On Behalf of Geometric Solutions

THANK YOU !

Norm & Tonya

GEOMETRIC SOLUTIONS

WALTONEN ENGINEERING