Smart Modeling Using Unigraphics

Mangapathi Rao Kothapalli
Tata Consultancy Services
mangapathirao.kothapalli@tcs.com
+91-44-55504024

Premium Partners:

Smart Modeling Using Unigraphics

What this presentation is all about

- Background of SMART Modeling
- What is SMART Modeling ?
- How is it Different from Normal Modeling ?
- Where is it applicable ?
- SMART Modeling practice in detail
- Advantages of SMART Modeling
- Case Study
- Conclusion

Background of SMART Modeling

Problem Statement

In the current scenario, using Unigraphics to build a 3-D Model by each individual has it's own structure of

- Underlying model history
- Feature definitions
- Feature dependencies
- Constraint mechanism

Often each modeler uses different approach or methodology for building a 3-d model, lead to, difficult in

- Understanding the structure of a 3-d model
- Reuse/Editing of a 3-d model

What is Smart Modeling Concept?

SMART Modeling Concept

Standard **M**ethodology **A**dapted for **R**ecreation of **T**hree-d (3-d) models using Unigraphics, which are having similarity in

- Geometrical shape
- Features that are associated to a solid body

Describes the right way of utilizing the capability of Unigraphics in order to build 3-d models that have

- Reusability
- Easily editable
- Well defined design intent

Establishing a Practice to increase the reusability of 3-d Models

How is it Different from Normal Modeling ?

Common Modeling Practice

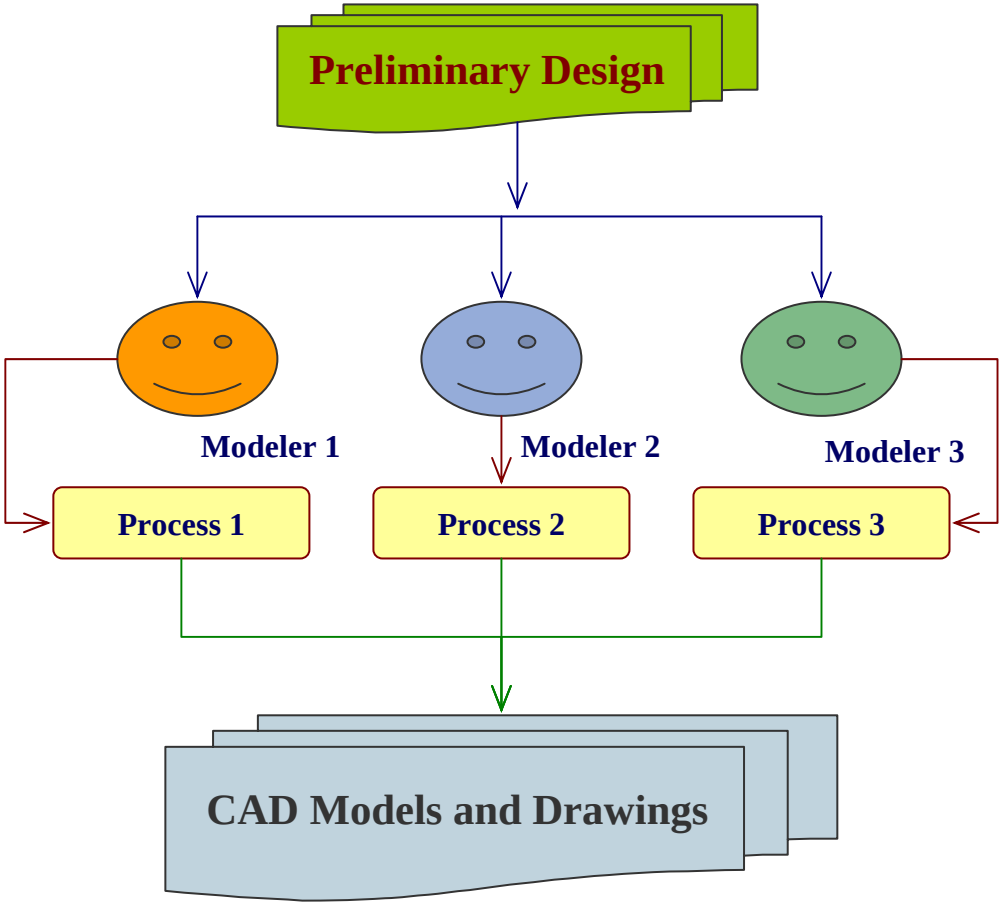

No common Process to create 3d models among modelers

Each Modeler use different approach or process for 3-d modeling

How is it Different from Normal Modeling ?

SMART Modeling Practice

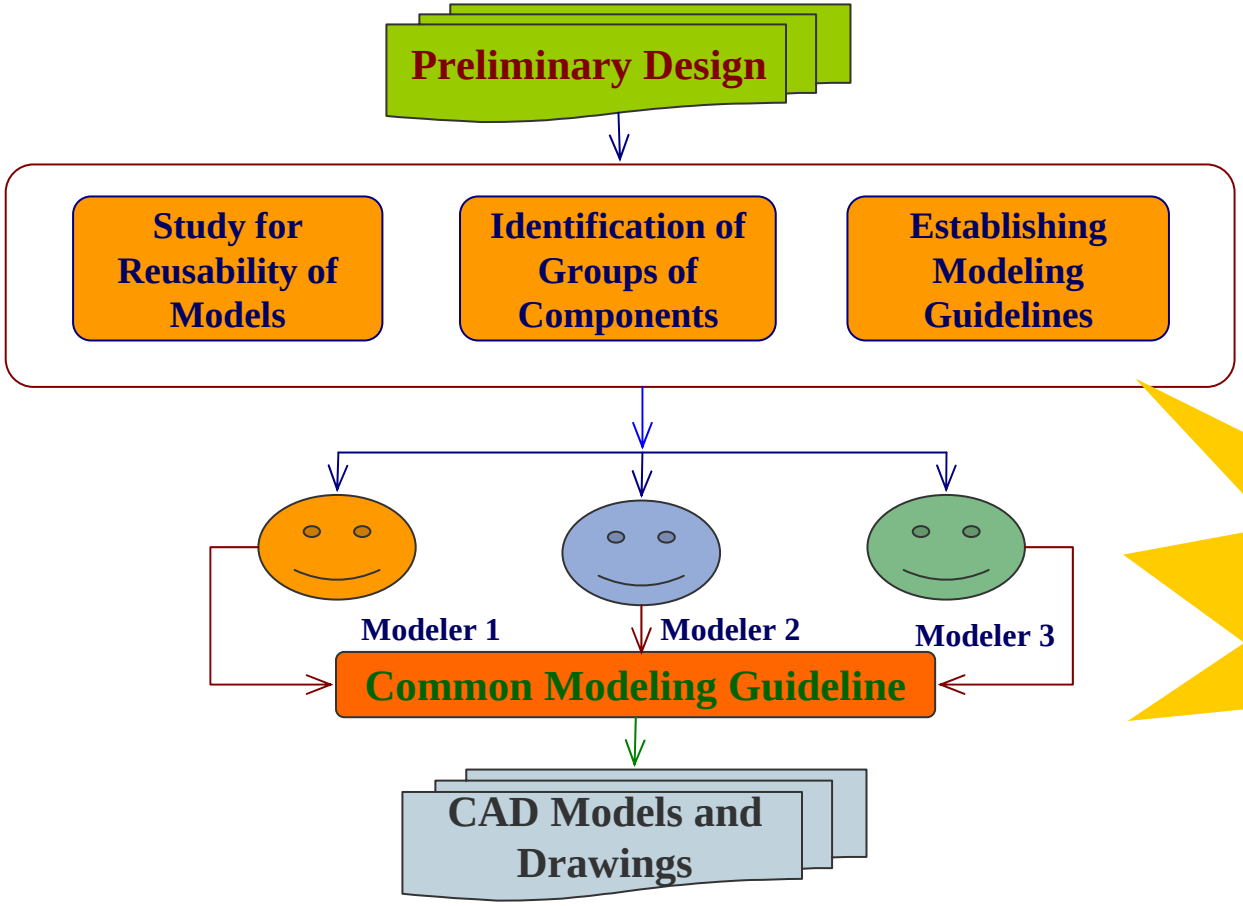

Standard process established to create 3d models among modelers

Heading towards reusability and usage of best practices

Where is it applicable ?

SMART Modeling Practice Applicability depends upon

- Similarity of geometry
- Similarity of the features used to create the model
- Where 100% automation is not possible
- Number of design changes on same kind of product

Where is it applicable ?

Similar geometrical shape, but different size

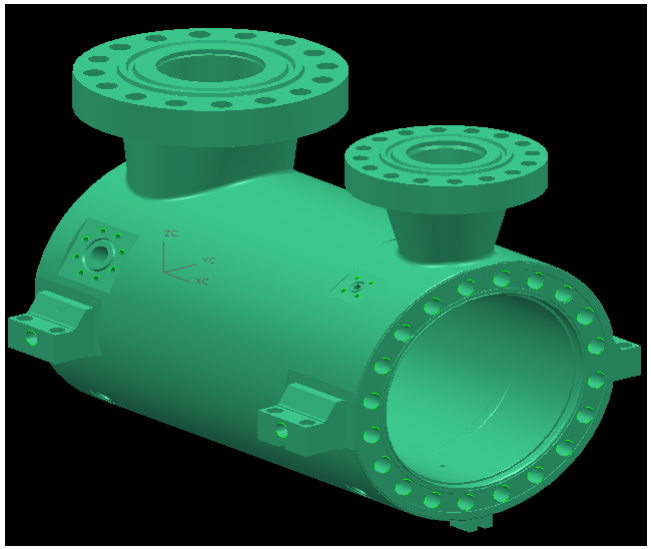

Model A

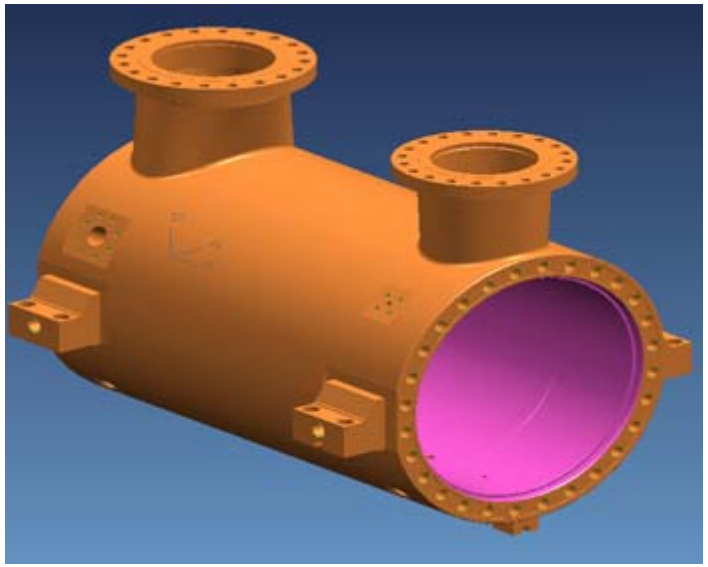

Model B

Model A and B are having similar kind of shape but with different size if dimensions

Where is it applicable ?

Similar features associated to different shapes of bodies

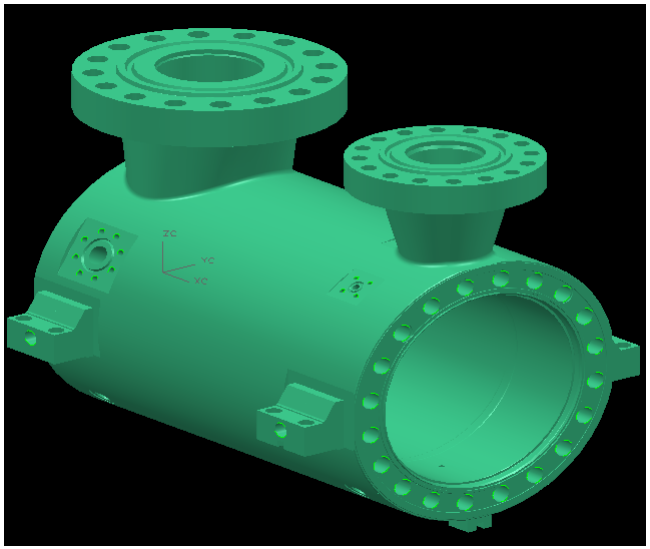

Model A

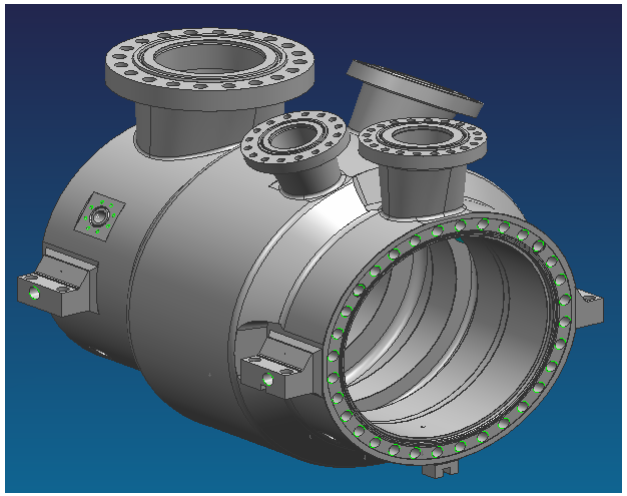

Model B

Model A and B are having similar kind of features used for creation, but different shape

Where is it applicable ?

Number of design changes on same kind of product

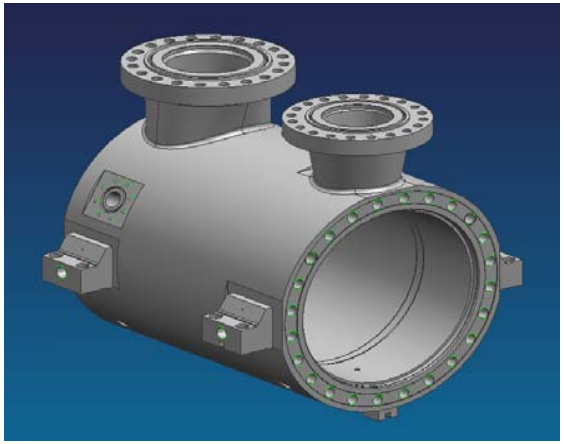

Model A

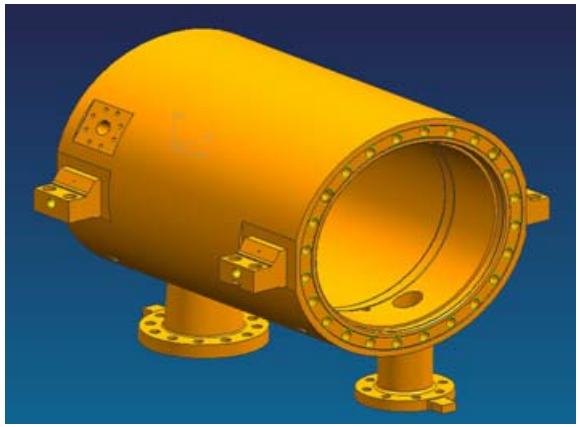

Model B

Model A and B belong to same product family but with two different configurations.

SMART Modeling in detail

Key Steps in SMART Modeling Practice

- Establish standardized sequence of feature creation order.
- Build feature relationship for critical features with datums rather than geometrical entities
- Utilize the part family concepts for similar kind of casting or forged components
- Establish template model approach for similar kind of machining operations done for single casting or forged body
- Use right feature for definition of geometry
- Utilize the power of expression language

SMART Modeling in detail

Standardized sequence of feature creation order

- Start the model with standard datums.

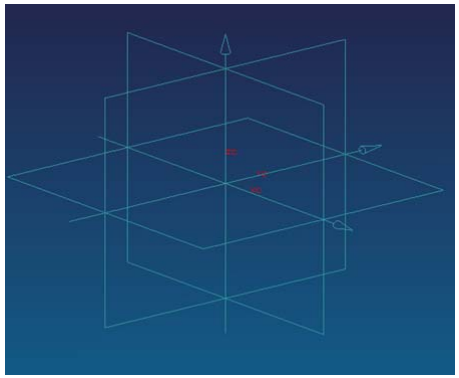

- Establish set of features data and prepare the sequence.

Machined face for Drillings

Internal Grooves

Machining Details for Support Blocks

Stud Bolt Drillings for Bearing Supports

Flange Connection Machining for Inlet Nozzle

Flange Connection Machining for Outlet Nozzle

This could be served as guideline

SMART Modeling in detail

Create the features as per the guideline.

Machined face for Drillings

Internal Grooves

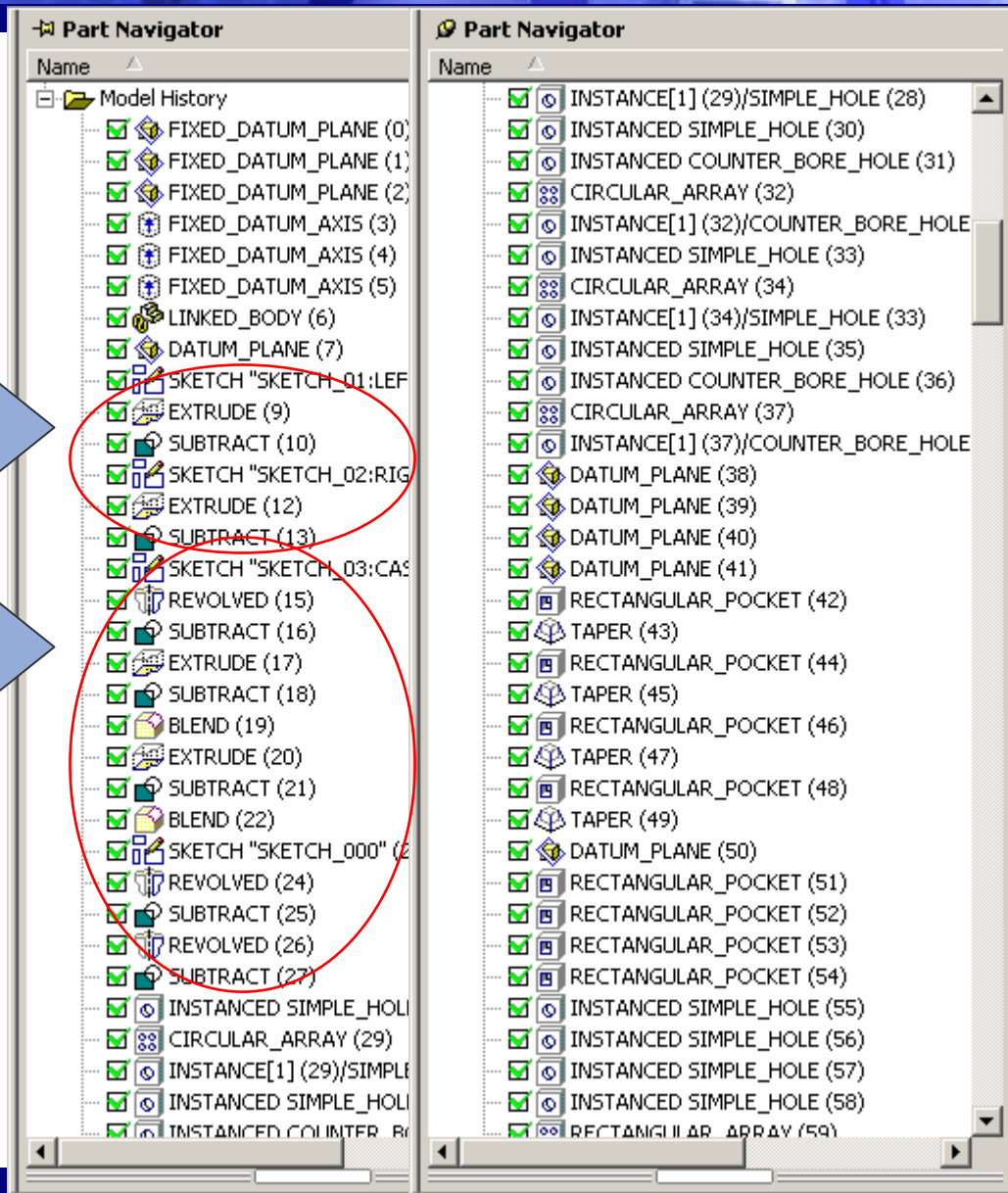

SMART Modeling in detail

Build feature relationship for critical features with datums rather than geometrical entities

Use datums for giving the positioning or placement of critical features.

- **This concept is similar to “Horizontal Modeling” by Delphi**

But SMART Modeling emphasizes more specific to Unigraphics which will explain in detail.

- How to position a feature
- Which datum need to be identified for positioning
- Different best practices for different feature positioning

SMART Modeling in detail

Establishing a guideline to define the positioning methodology for various features as per design intent

- Enable to reattach the features without any error messages
- Better control over the configuration and editing of features

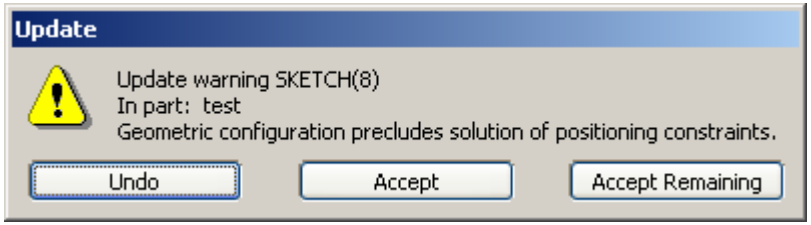

Typical error message due to false method of positioning

SMART Modeling in detail

Utilize the part family concepts for similar kind of casting or forged components

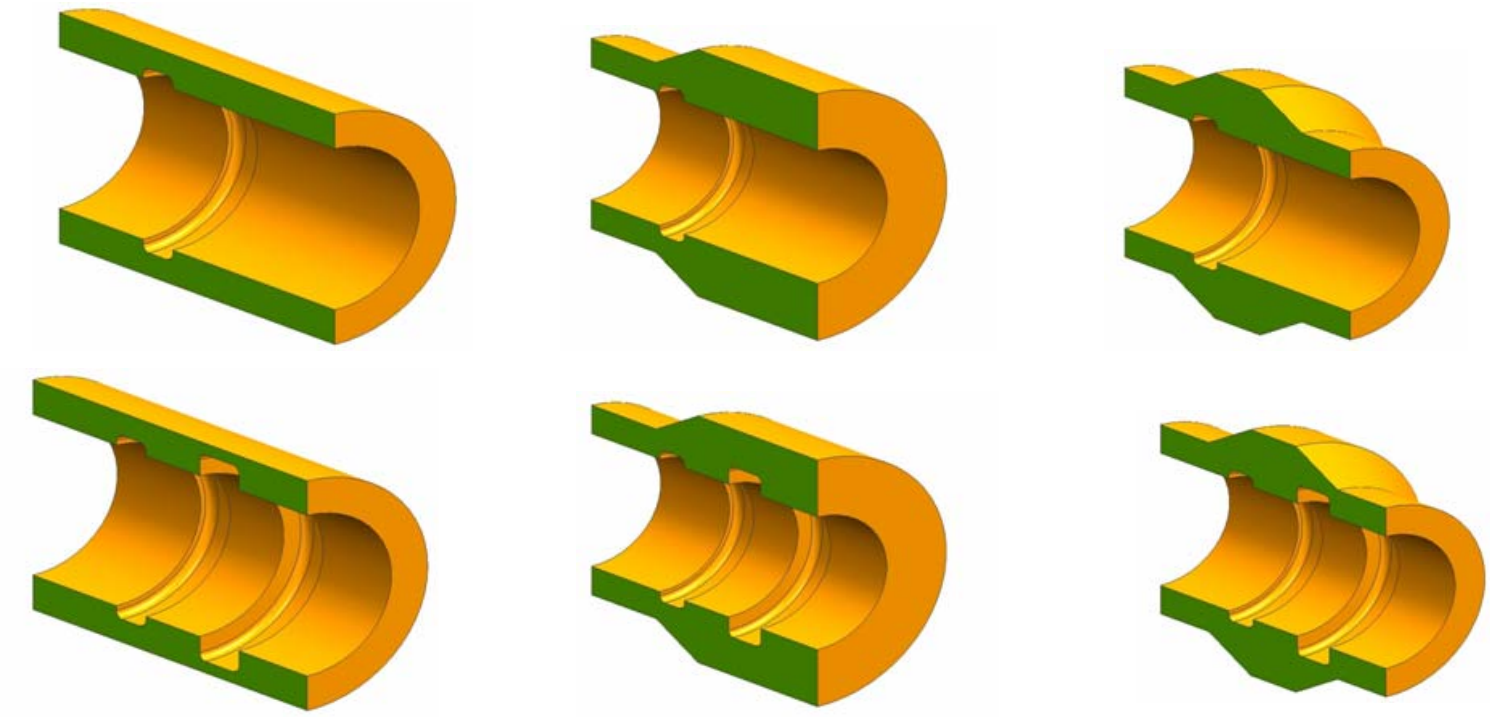

examples geometry that can be obtained using part family

SMART Modeling in detail

Establish template model approach for similar kind of machining operations done for single casting or forged body

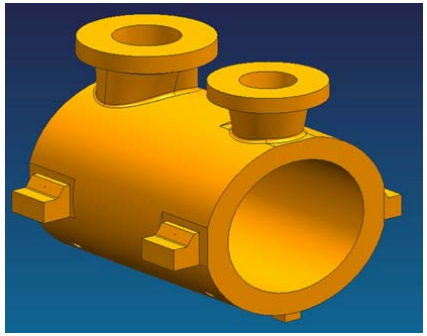

Pre-Machined Casing Model

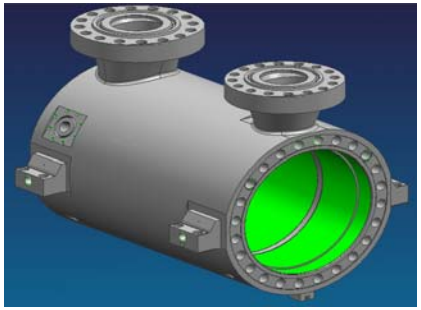

Machined Casing Model

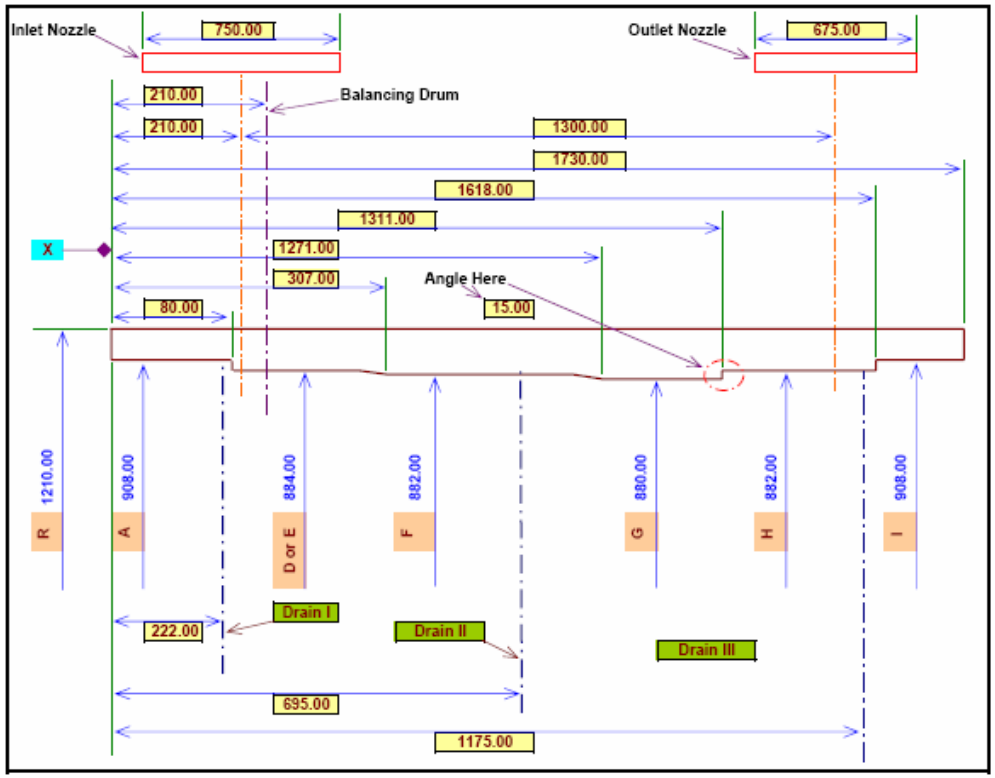

Excel Template to manage UG parameters

Internal Grooves

SMART Modeling in detail

Use right feature for definition of geometry

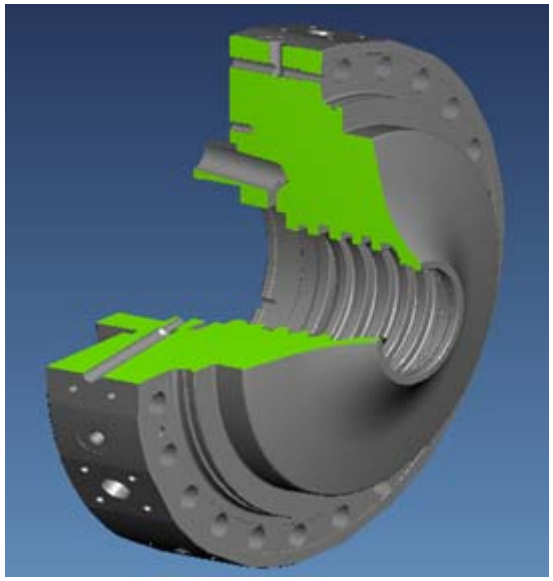

Unigraphics 3-d model

Sketch feature used in 3-d model

This example shows the usage of sketch for this kind geometry. Even more it could be broken into 2 to 3 sketches to capture effectively the design intent.

SMART Modeling in detail

Utilize the power of Unigraphics expression language

Using Expression Language to the maximum extent involves in identifying

- Key Parameters
- User Expression Types
- Design intent

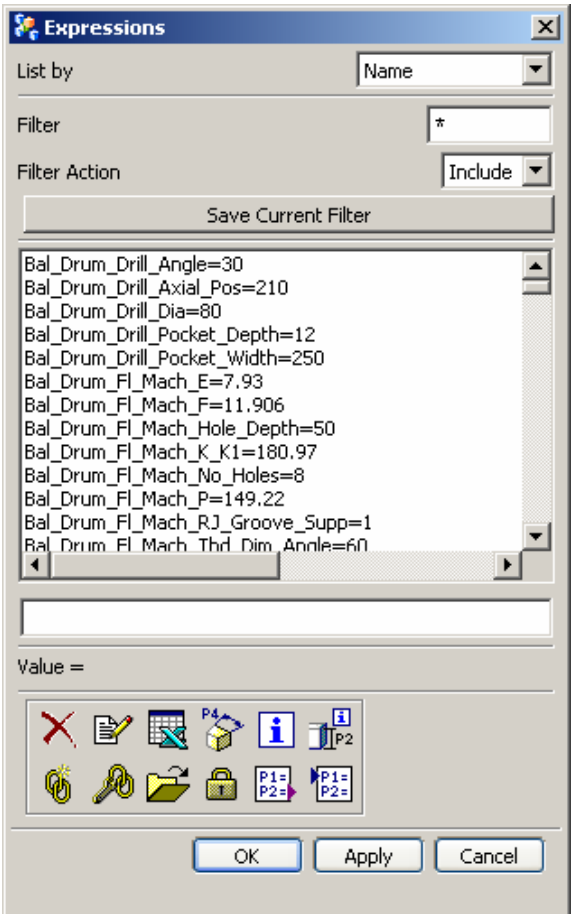

User Expressions could be used to change the model Configuration

SMART Modeling in detail

User Expressions could be modified using text editor

bcl_nzl_upward_std_casing_expression.exp - Notepad

File Edit Format Help

```
Bal_Drum_Drill_Angle=30
Bal_Drum_Drill_Axial_Pos=210
Bal_Drum_Drill_Dia=80
Bal_Drum_Drill_Pocket_Depth=12
Bal_Drum_Drill_Pocket_Width=250
Bal_Drum_Fl_Mach_E=7.93
Bal_Drum_Fl_Mach_F=11.906
Bal_Drum_Fl_Mach_Hole_Depth=50
Bal_Drum_Fl_Mach_K_K1=180.97
Bal_Drum_Fl_Mach_No_Holes=8
Bal_Drum_Fl_Mach_P=149.22
Bal_Drum_Fl_Mach_RJ_Groove_Supp=1
Bal_Drum_Fl_Mach_Thd_Dim_Angle=60
Bal_Drum_Fl_Mach_Thd_Dim_Drill_Size=26.211
Bal_Drum_Fl_Mach_Thd_Dim_Len=38
Bal_Drum_Fl_Mach_Thd_Dim_Maj_Dia=30
Bal_Drum_Fl_Mach_Thd_Dim_Min_Dia=26.211
Bal_Drum_Fl_Mach_Thd_Dim_Pitch=3.5
Bal_Drum_Fl_Mach_W=234.95
Bal_Drum_Fl_Mach_r=0.794
Cas_Inr_Grv_Dia_A=908
Cas_Inr_Grv_Dia_D_E=884
Cas_Inr_Grv_Dia_F=882
Cas_Inr_Grv_Dia_G=880
Cas_Inr_Grv_Dia_H=882
Cas_Inr_Grv_Dia_I=908
Cen_Blck_Mach_A=30
Cen_Blck_Mach_B=30
Cen_Blck_Mach_C=60
Dist_Between_Leg_Supports=1510
Dist_Betwn_Nozzles=1300
Dist_Inlet_Nozzle=210
Drain_III_Axial_Pos=1175
Drain_II_Axial_Pos=695
Drain_I_Axial_Pos=222
Drain_Pocket_Depth=5
Drain_Pocket_Width=140
Fl_Mach_Inlet_Nzl_D=295
Fl_Mach_Inlet_Nzl_E=15.875
```

Advantages of SMART Modeling

- Level of Skill that required to edit the complex models can be minimized
- Time Saving in Editing the existing Model
- Design cycle time could be minimized
- Well defined and organized model tree
- Well defined design intent
- Design automation programs could be managed easily

Case Study :

Using Common Modeling Practice

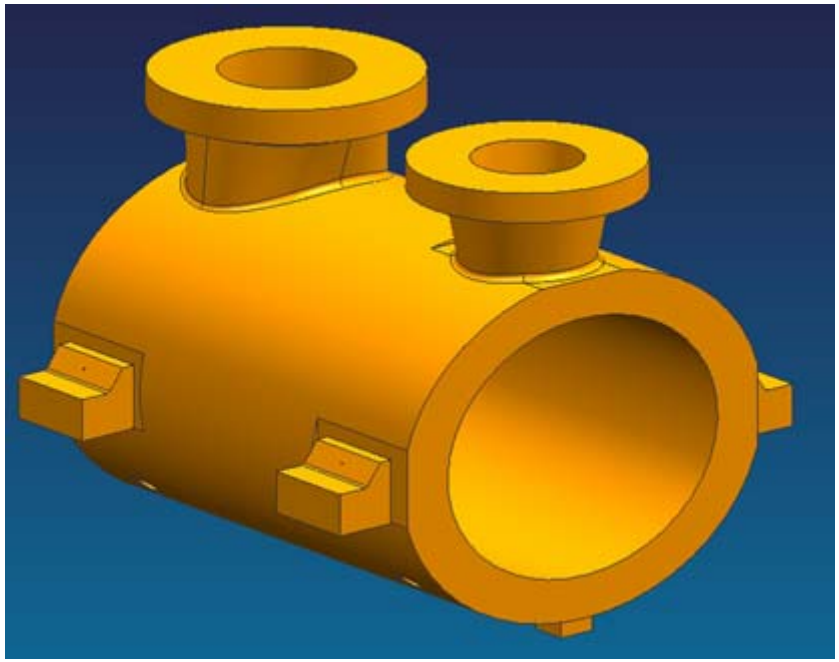

Pre-Machined Casing Model

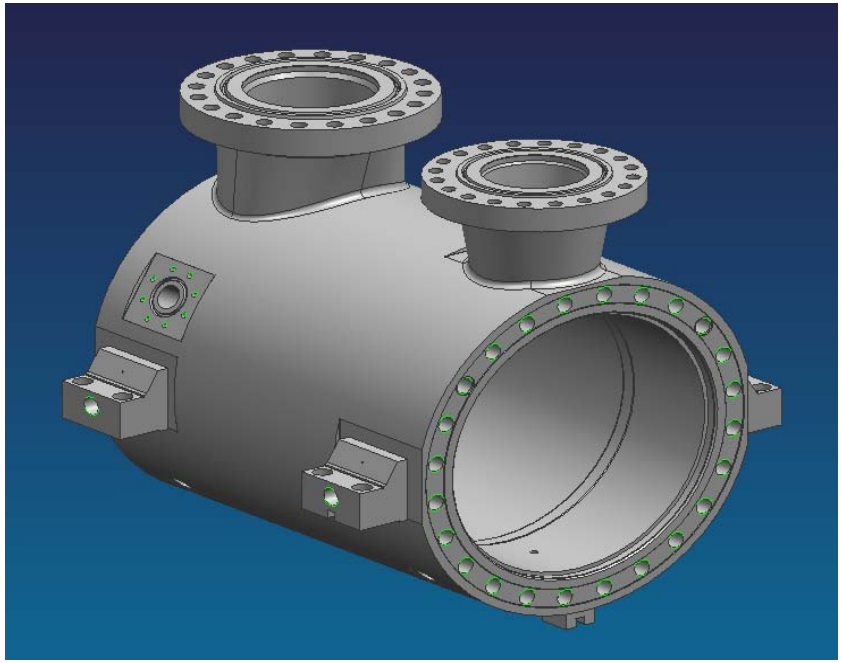

Machined Casing Model

Case Study :

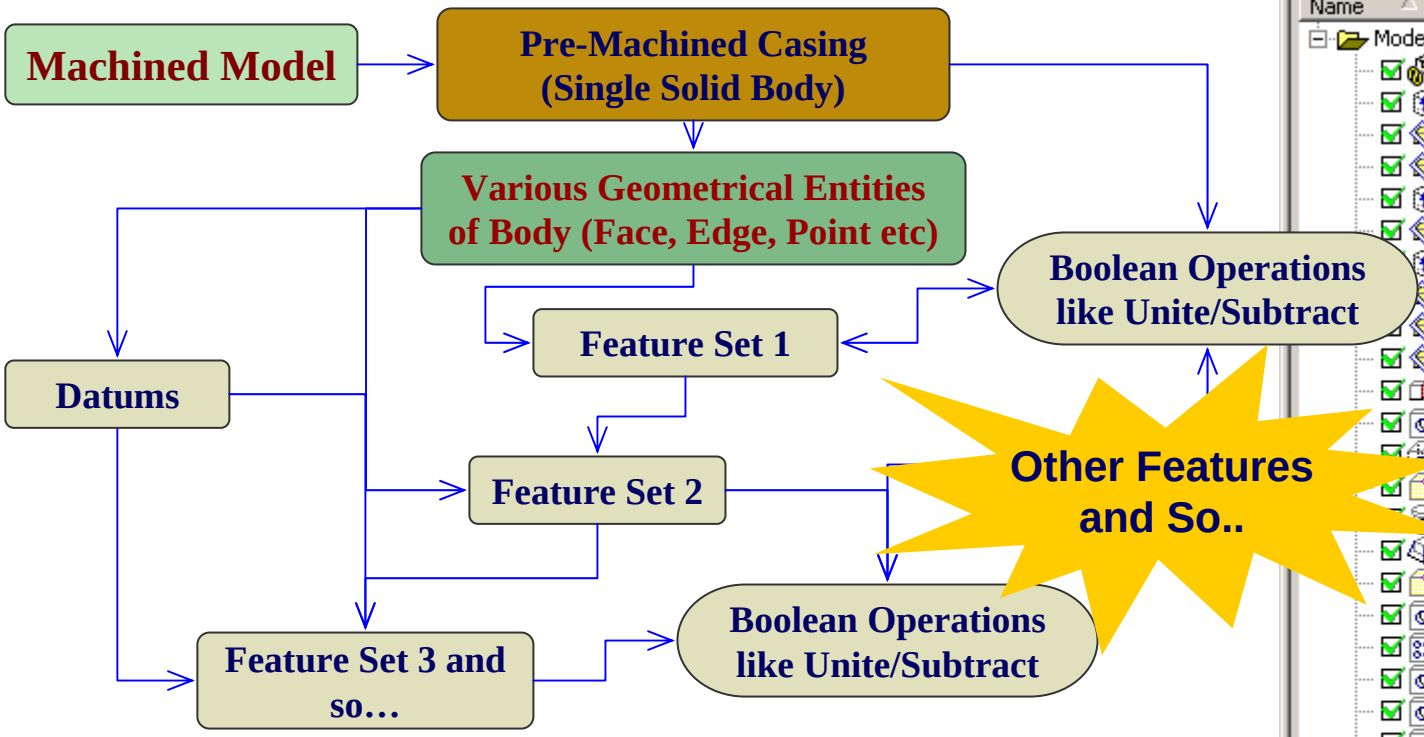

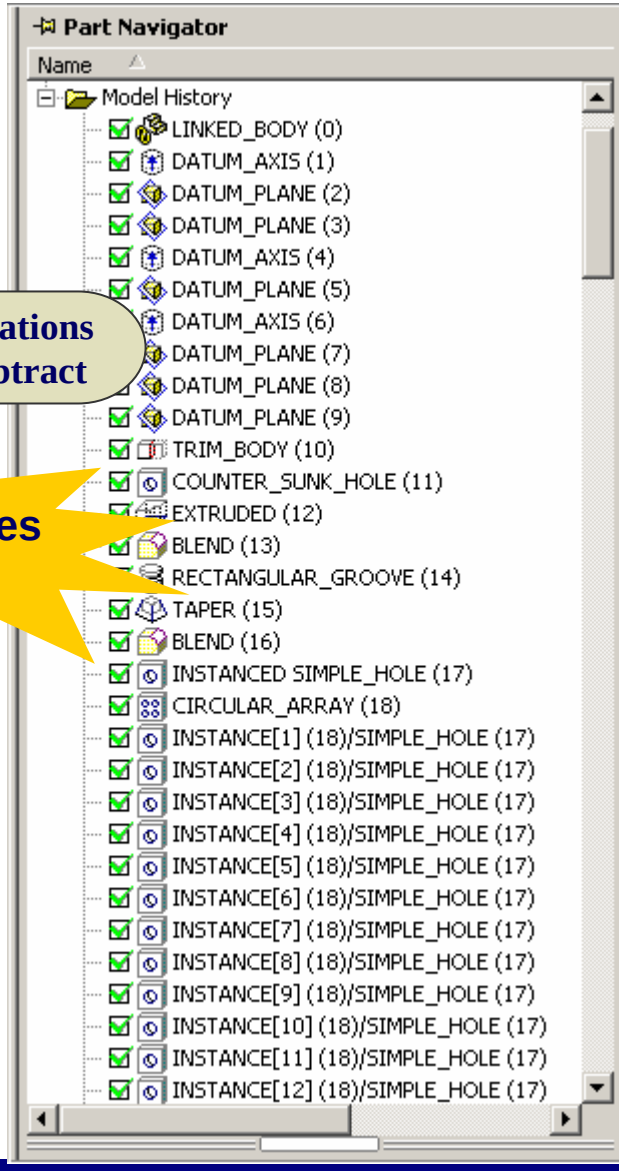

- No sequence defined for features
- Features associated to geometrical entities

Case Study :

- Typical errors when other user try to use existing model

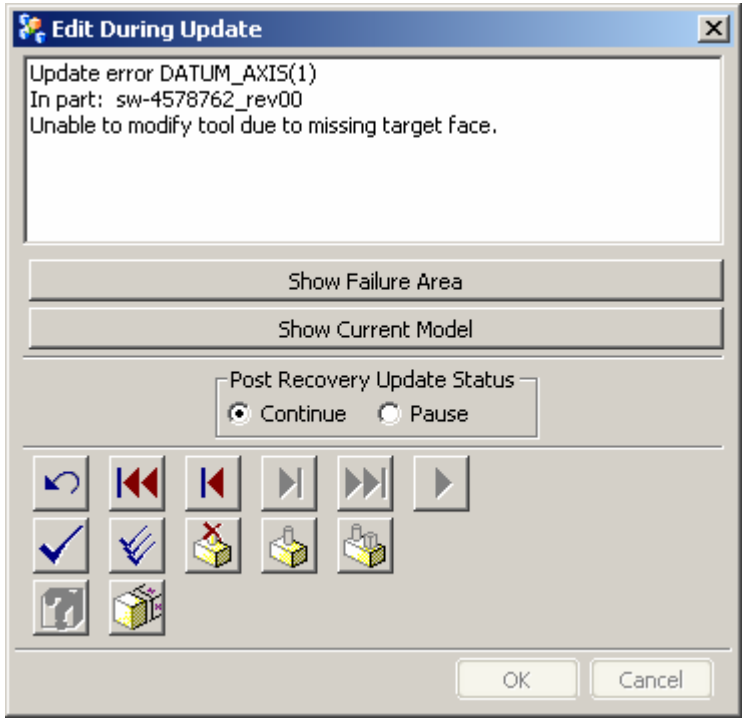

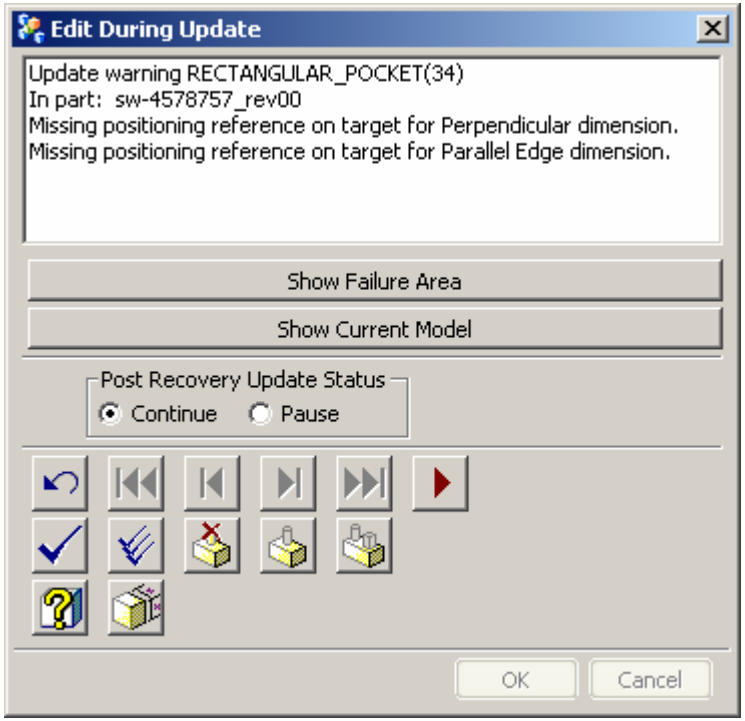

Placement face need to be reattached

Positioning dimensions need to be redefined

Case Study :

Using SMART Modeling Practice

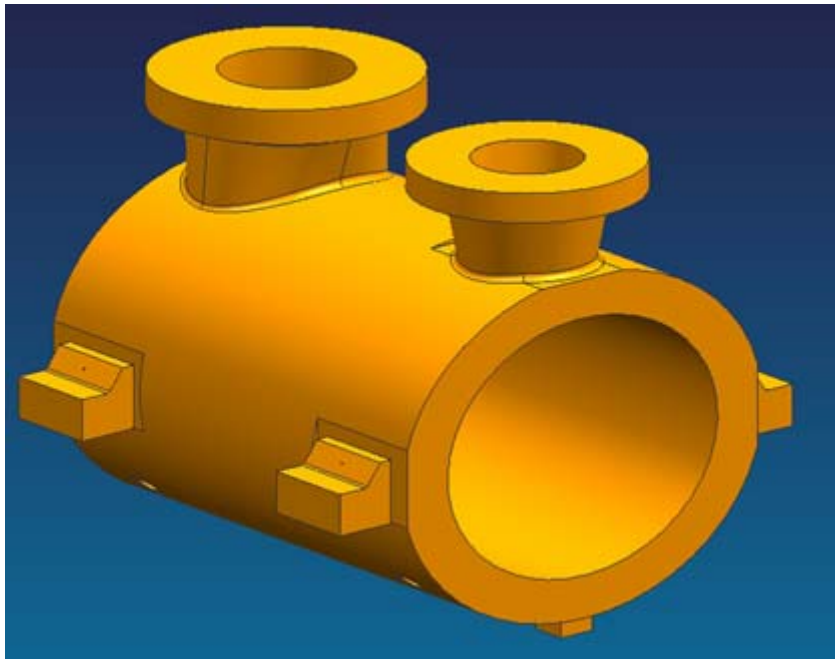

Pre-Machined Casing Model

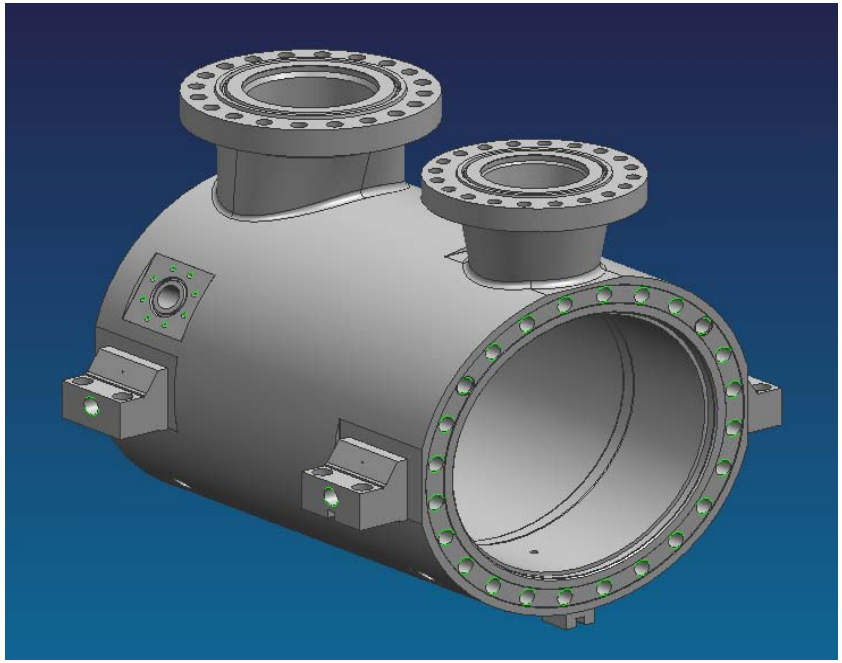

Machined Casing Model

Case Study :

- Identified key parameters that control the geometry of model

Type of Compressor	BCL450A	
Type of Flange Connection	RJ	
Inlet Flange Size	14 "	
Inlet Flange Rating	1500	
Outlet Flange Size	12 "	
Outlet Flange Rating	1500	
Distance Between Leg Supports	1510.00	
Balancing Drum Flange Size	4 "	
Balancing Drum Flange Rating & Connection	900	RJ
Typical Drain Flange Size	1 "	
Typical Drain Flange Rating & Connection	900	RJ
Typical Drain Flange Pocket Width & Depth	140.00	5.00
Typical Drain Hole Dia	22.00	
Inlet Nozzle Machining (E.C.C 02.01.03) Page 9/10	Yes	
Outlet Nozzle Machining (E.C.C 02.01.03) Page 9/11	Yes	

- Using excel to get other parameters automatically

Inlet Flange	
W	635.0000
d	60.0000
No of Holes	16.0000
K or K1	488.9500
E	15.8750
P	419.1000
F	26.9880
r	2.3810
O	749.3000
D	295.0000

Outlet Flange	
W	571.5000
d	54.0000
No of Holes	16.0000
K or K1	438.1500
E	14.2880
P	381.0000
F	23.0190
r	1.5880
O	673.1000
D	268.0000

Balancing Drum Flange	
W	234.9500
d	32.0000
No of Holes	8.0000
K or K1	180.9700
E	7.9300
P	149.2200
F	11.9060
r	0.7940
Pocket Width	250.0000
Pocket Depth	12.0000

Case Study :

- Established sequence for features

Machined Casing Model

- **Pre-Machined Casing (Single Solid Body)**
- **Internal Grooves**
- **Stud Bolt Drillings for Bearing Supports**
- **Machining Details for Support Blocks**
- **Flange Connection Machining for Inlet Nozzle**
- **Flange Connection Machining for Outlet Nozzle**
- **Flange Connection Machining for Balancing Line**
- **Flange Connection Machining for Drainages**

Total 120 Features

Case Study :

- Established optimized associativity for features

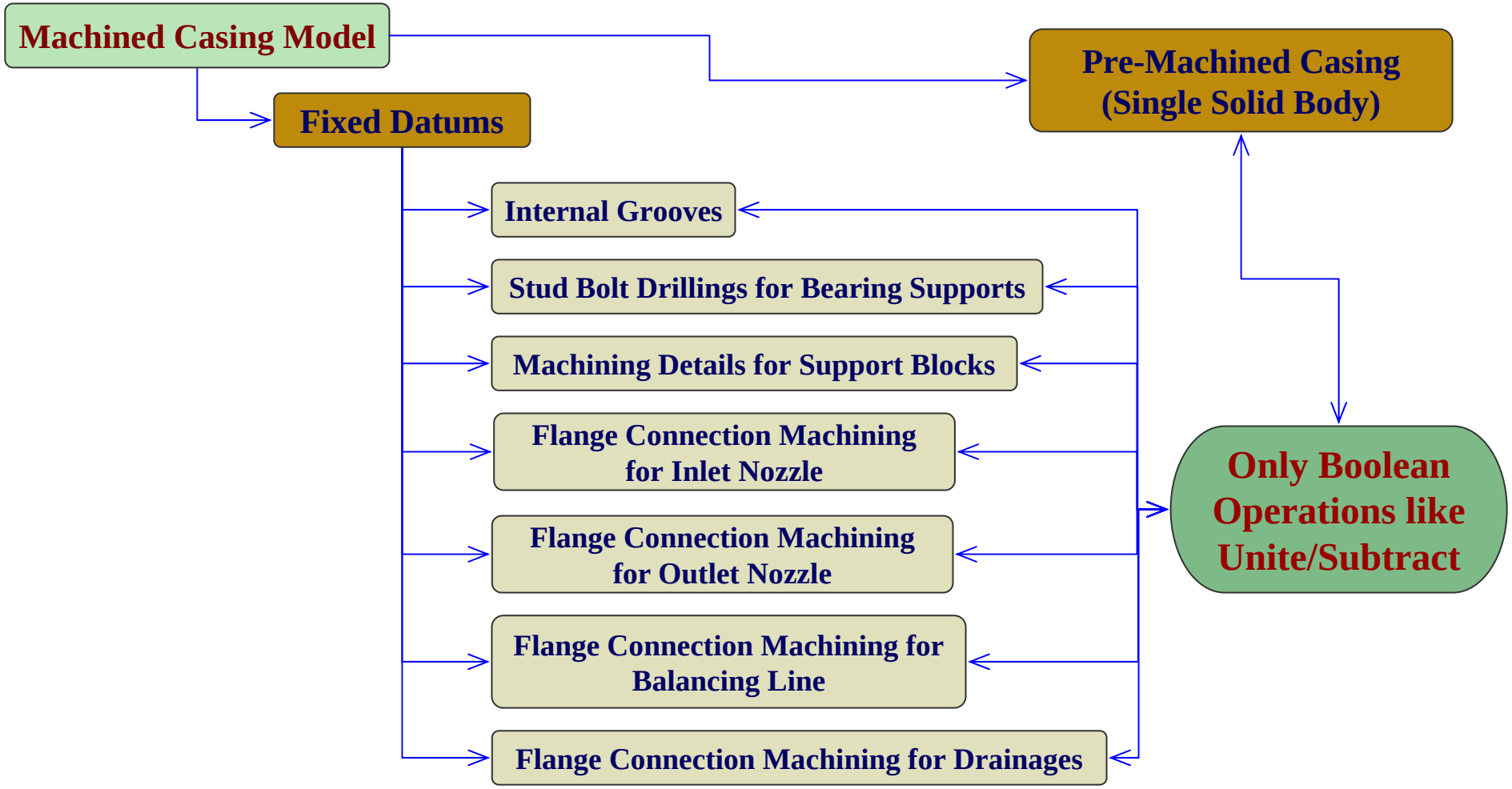

Conclusion

Savings and Return on Investment details

➢ Using Common Modeling Practice	**24 to 32 hours**
➢ Using SMART Modeling Practice	**4 to 8 hours**
➢ Savings using SMART Modeling	**20 to 24 hours**
➢ Methodology development effort	**80 hours**
➢ Number of design changes per year	**50**
➢ Total Savings per year	**1000 to 1200 hours**

Conclusion

- There is a need for standardization of Unigraphics modeling procedure
- Need for encouragement of reusing the 3-D models

Few disadvantages with SMART Modeling

- Increase in number of features
- Not applicable for small models

Questions?