Parametric Surfboard Design - NX

Chris Borst

Bruce Pettibone

Borst Designs

cmborst@aol.com

760 – 672 7684

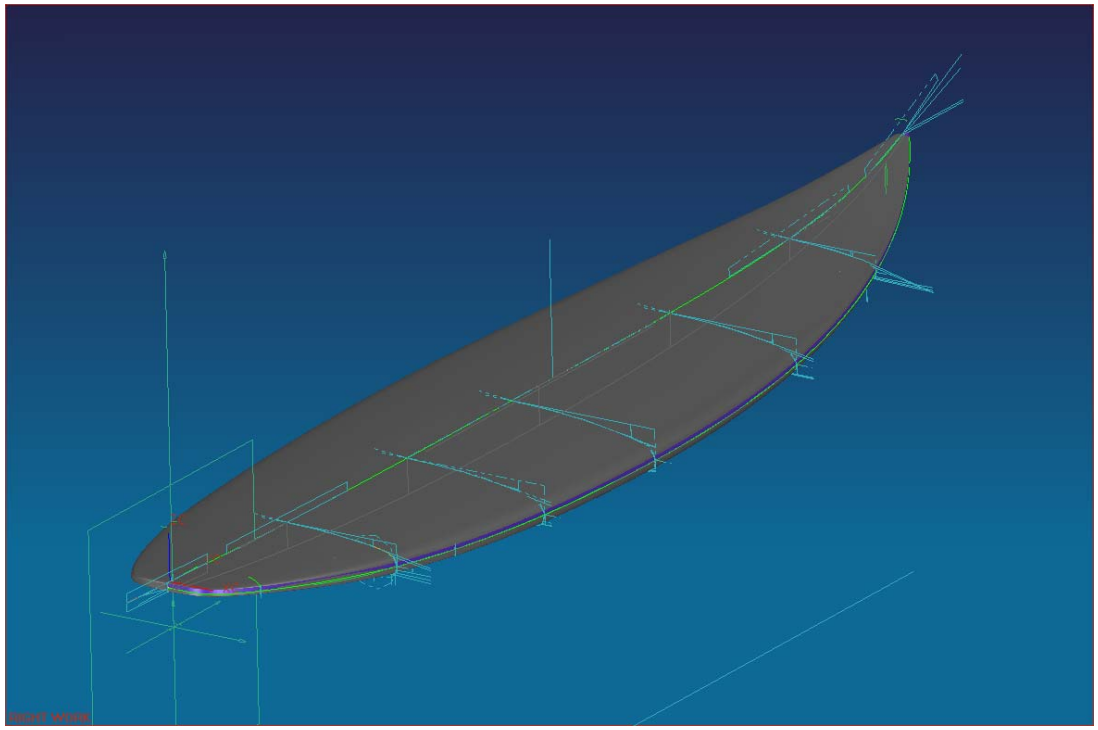

Premium Partners:

Parametric Surfboard Modeling – The Process

- Bring Scan into UG
- Orient Scan
- Bring Scan into Parametric Model
- Adapt Sketches, Bridge Curves, Spline By Points to Match Cross Sections through Scanned Model
- Develop Main Deck and Bottom Surfaces
- Overbuild and Trim
- Model Rail Surfaces
- Sew Surfaces into Solid

Parametric Framework for Positioning Scan

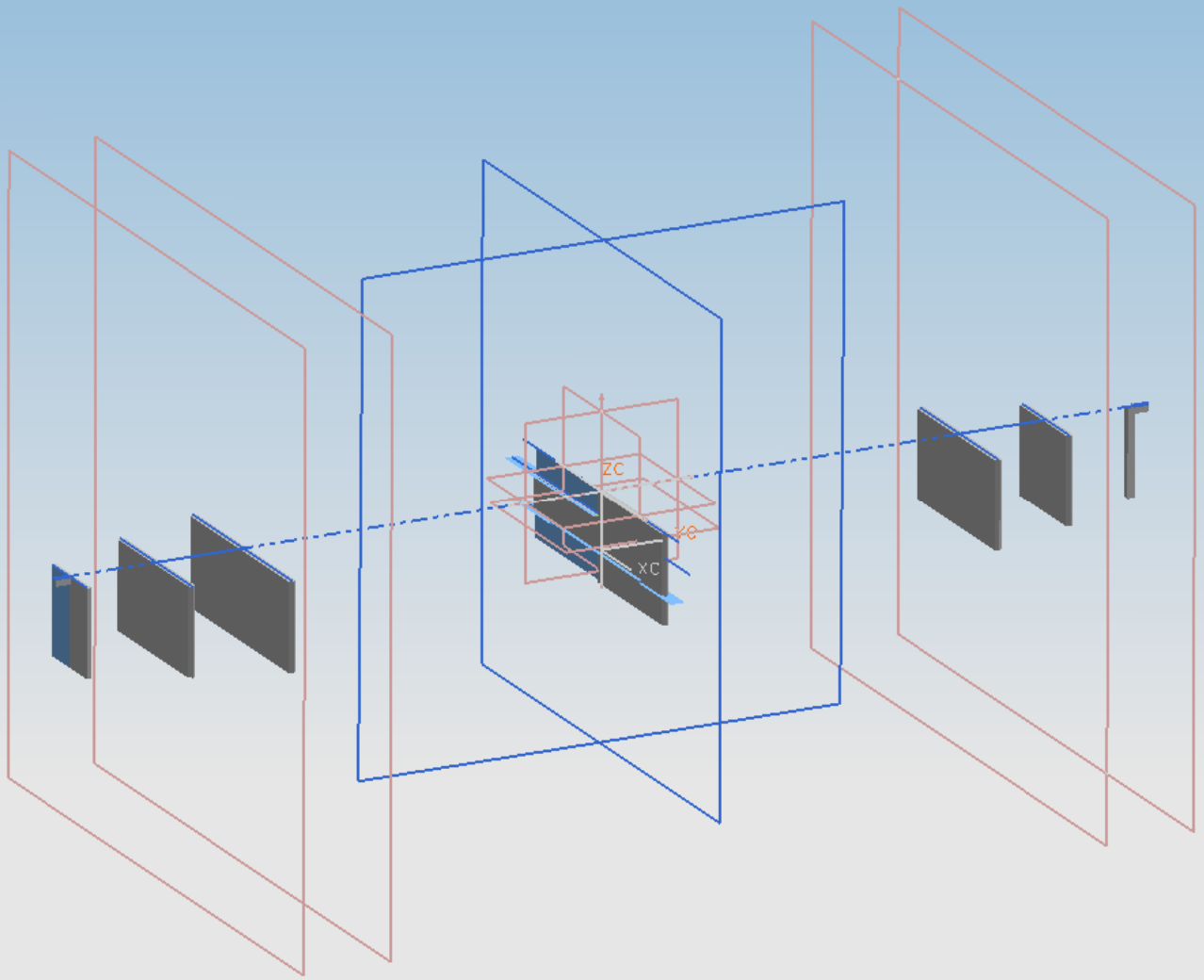

Rapid Surfaced Model in Arbitrary Space from Scanner

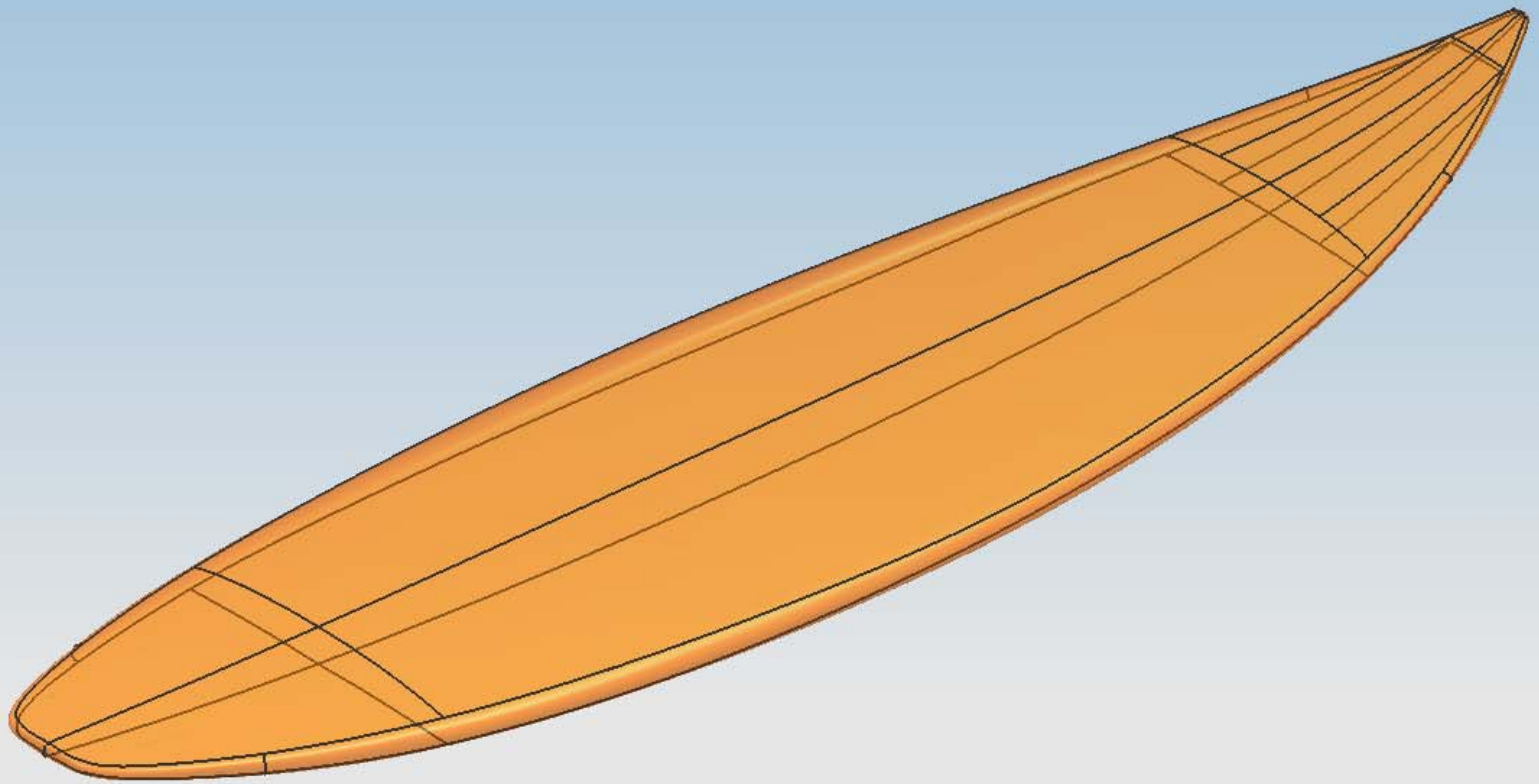

Board Oriented - Can be used as Template for Creating Parametric Model

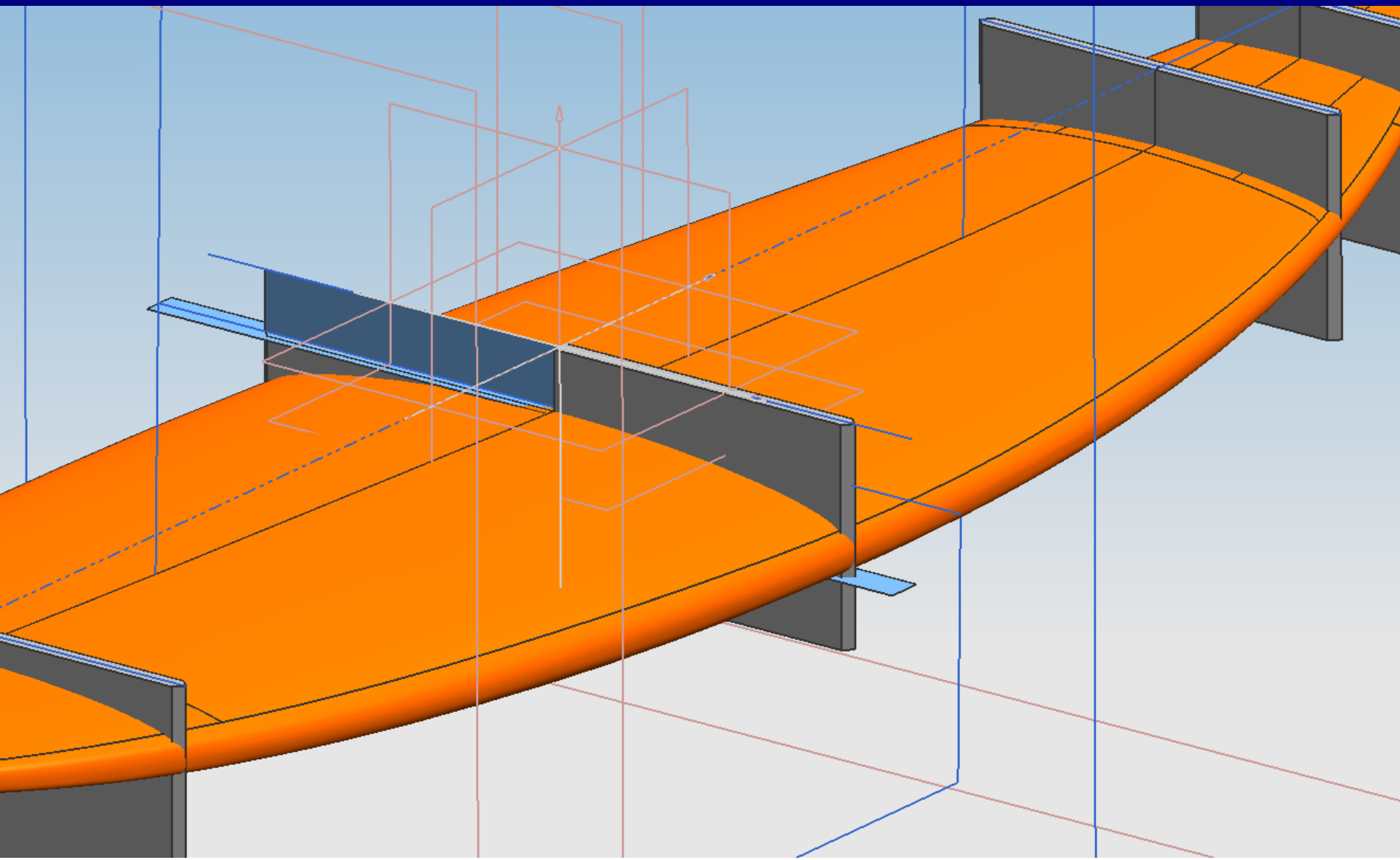

Begin Matching Parametric Model to Scanned Board

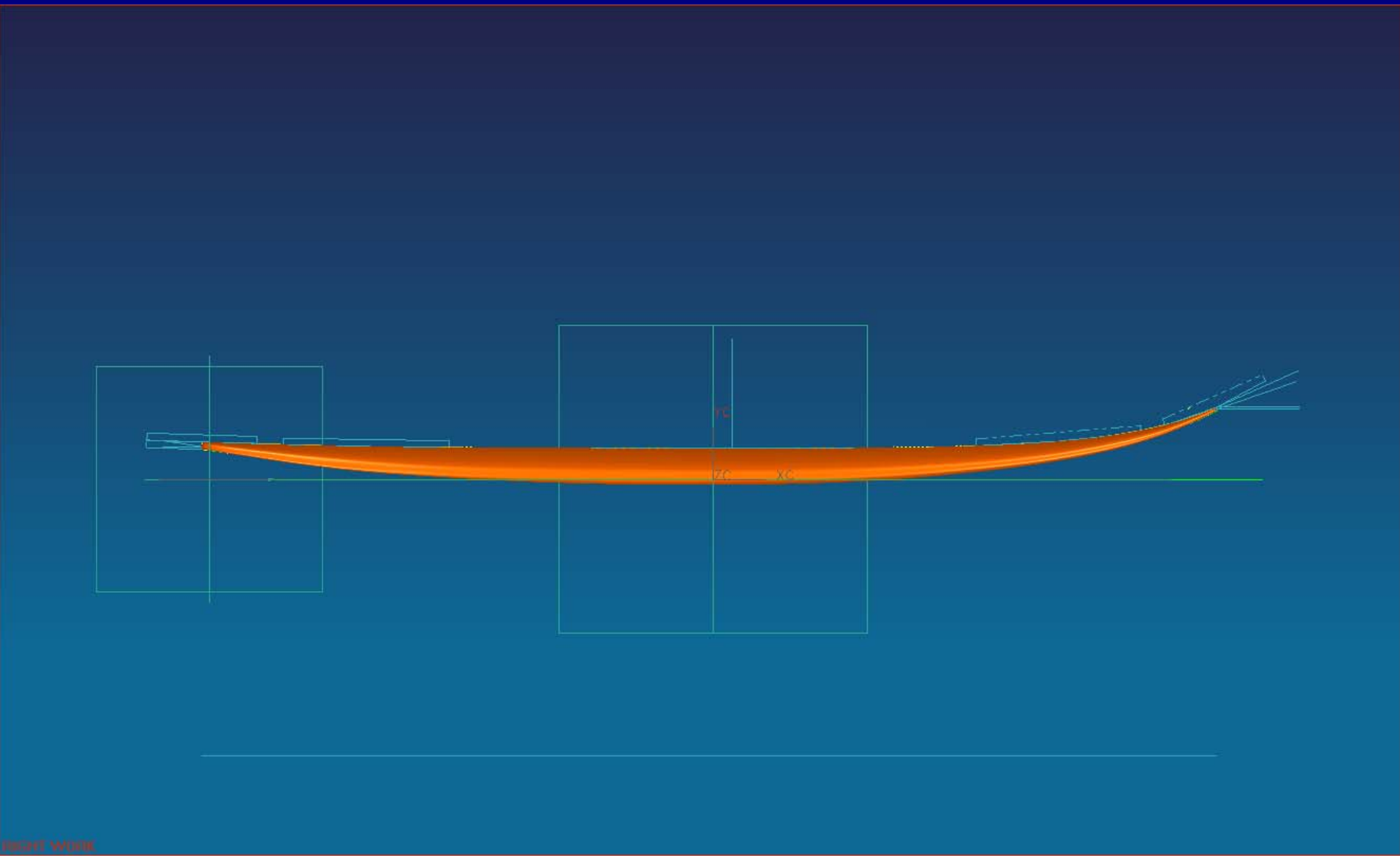

Sketch Defining Heights, Arcs, Angles for Controlling Bridge Curves

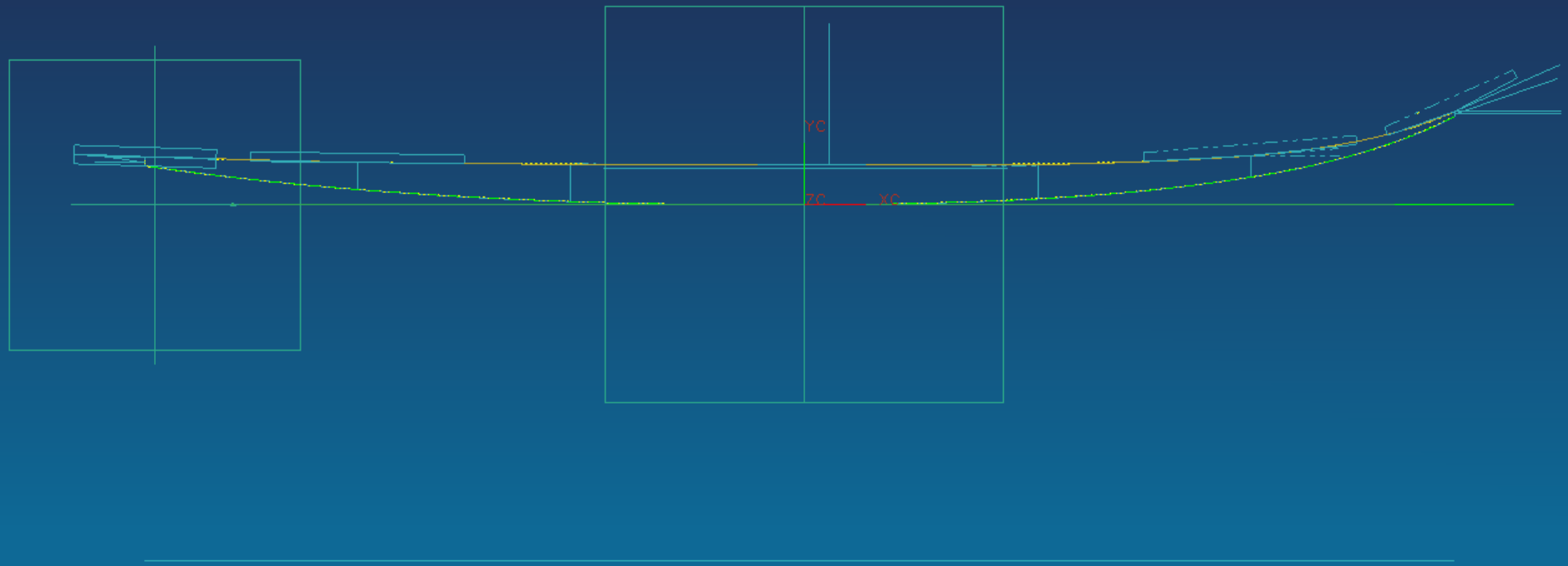

Sketch Defining Heights, Arcs, Angles for Controlling Bridge Curves

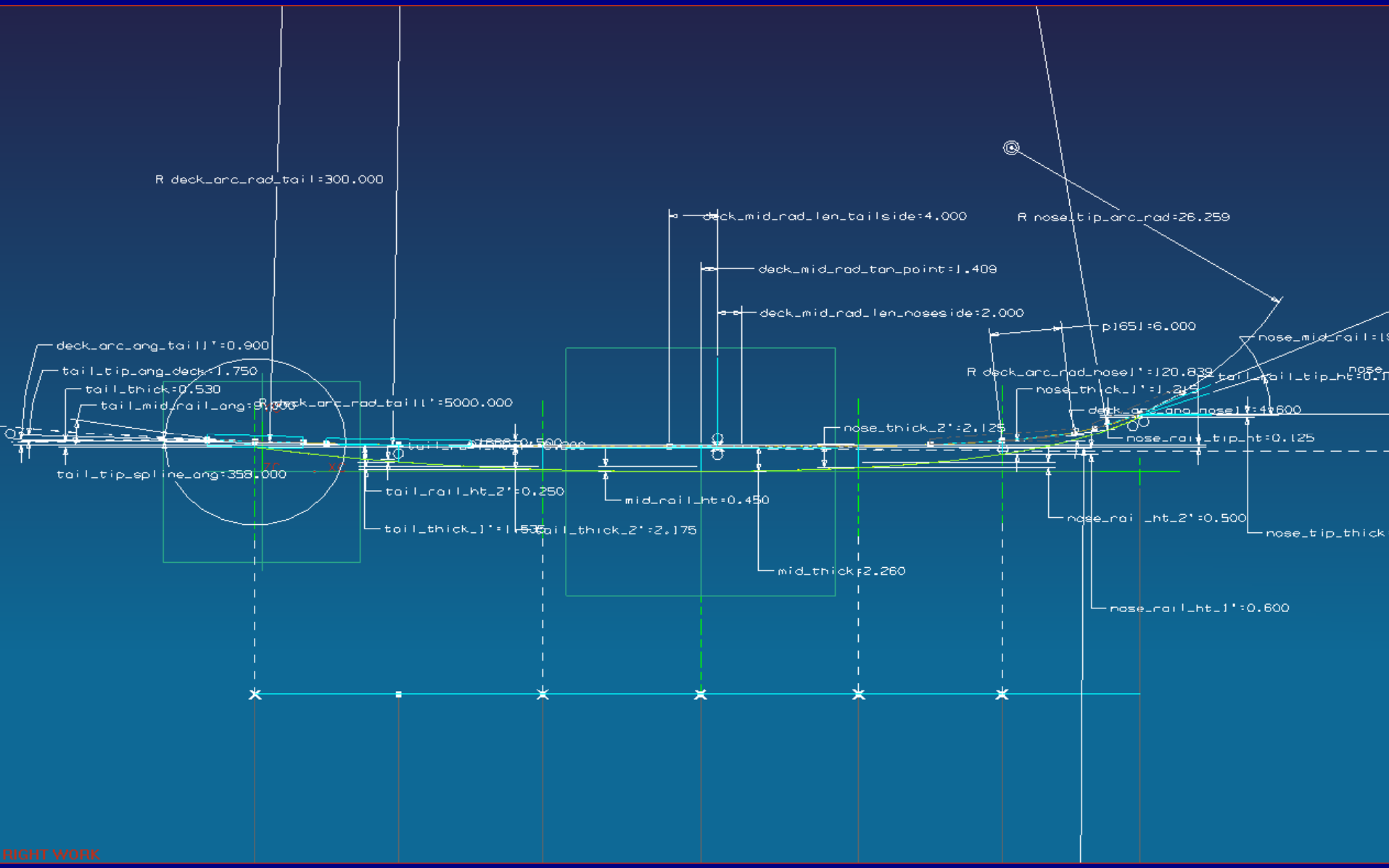

Develop Cross Sections and Overbuild Bottom and Deck Surfaces

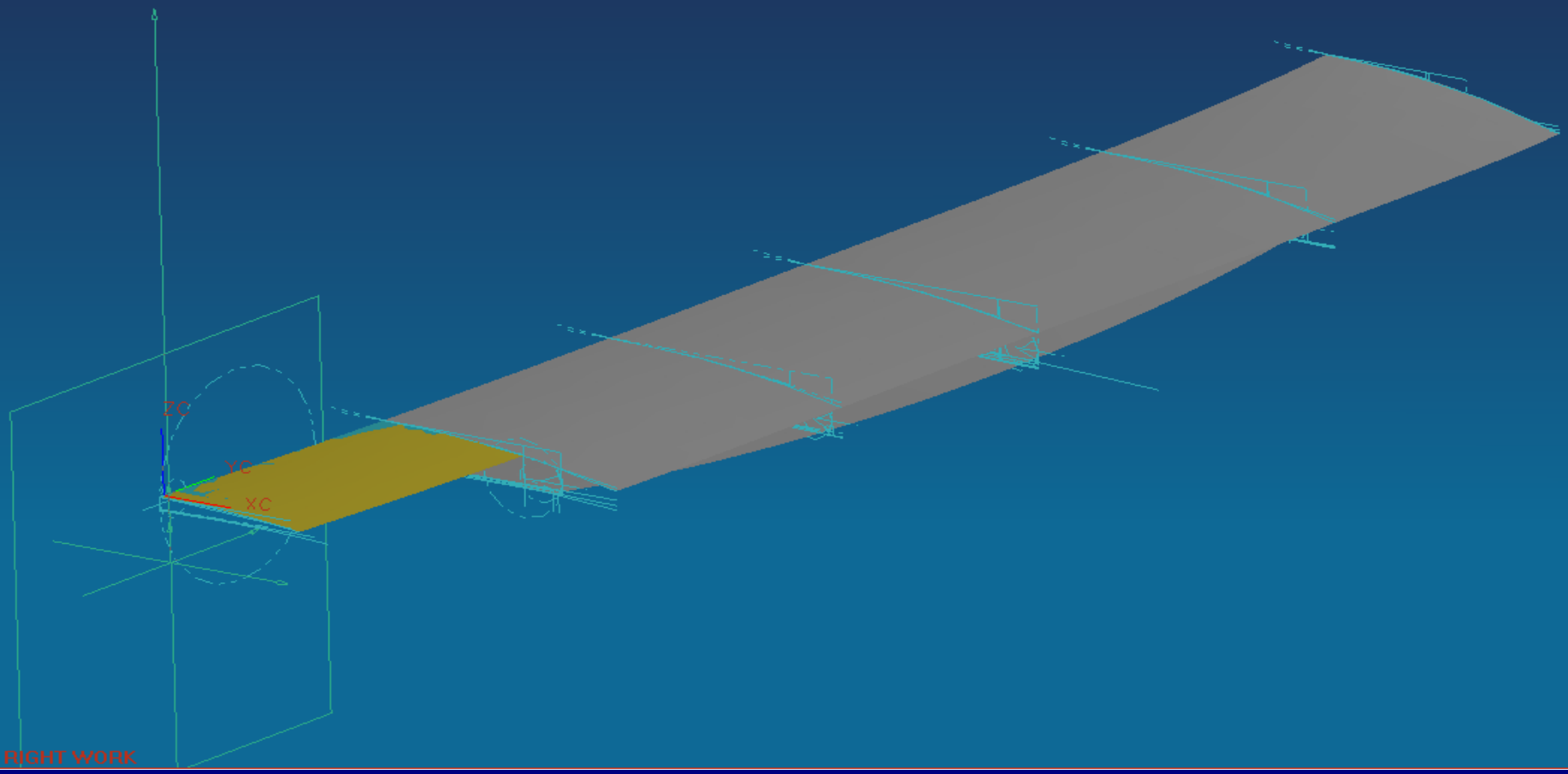

Define Template to Trim Overbuilt Surfaces

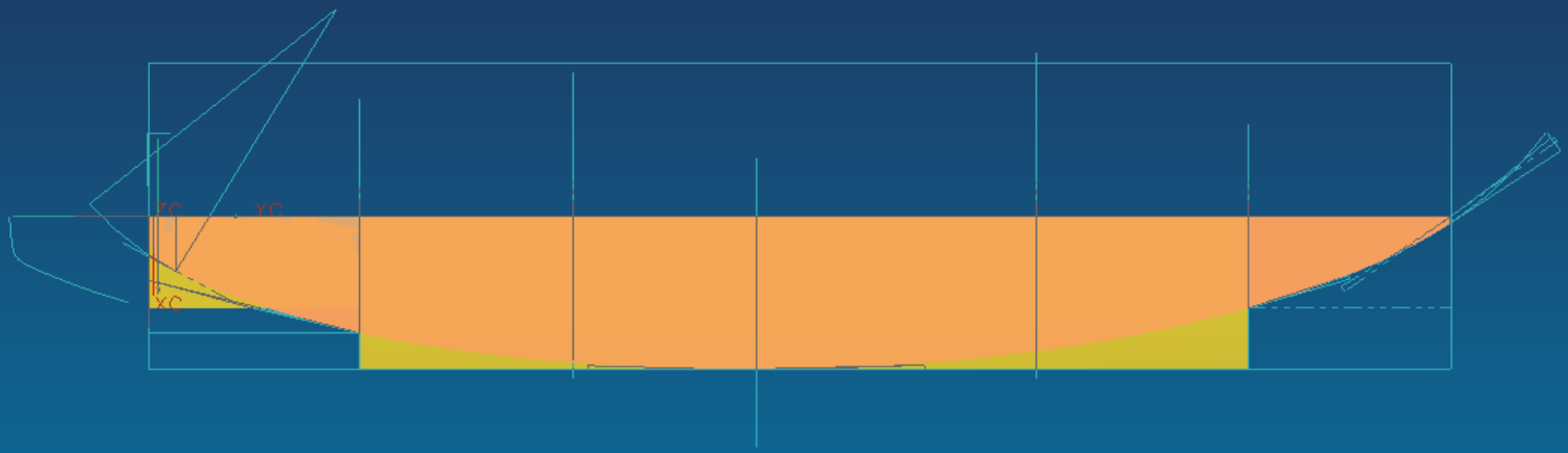

Define Template to Trim Overbuilt Surfaces

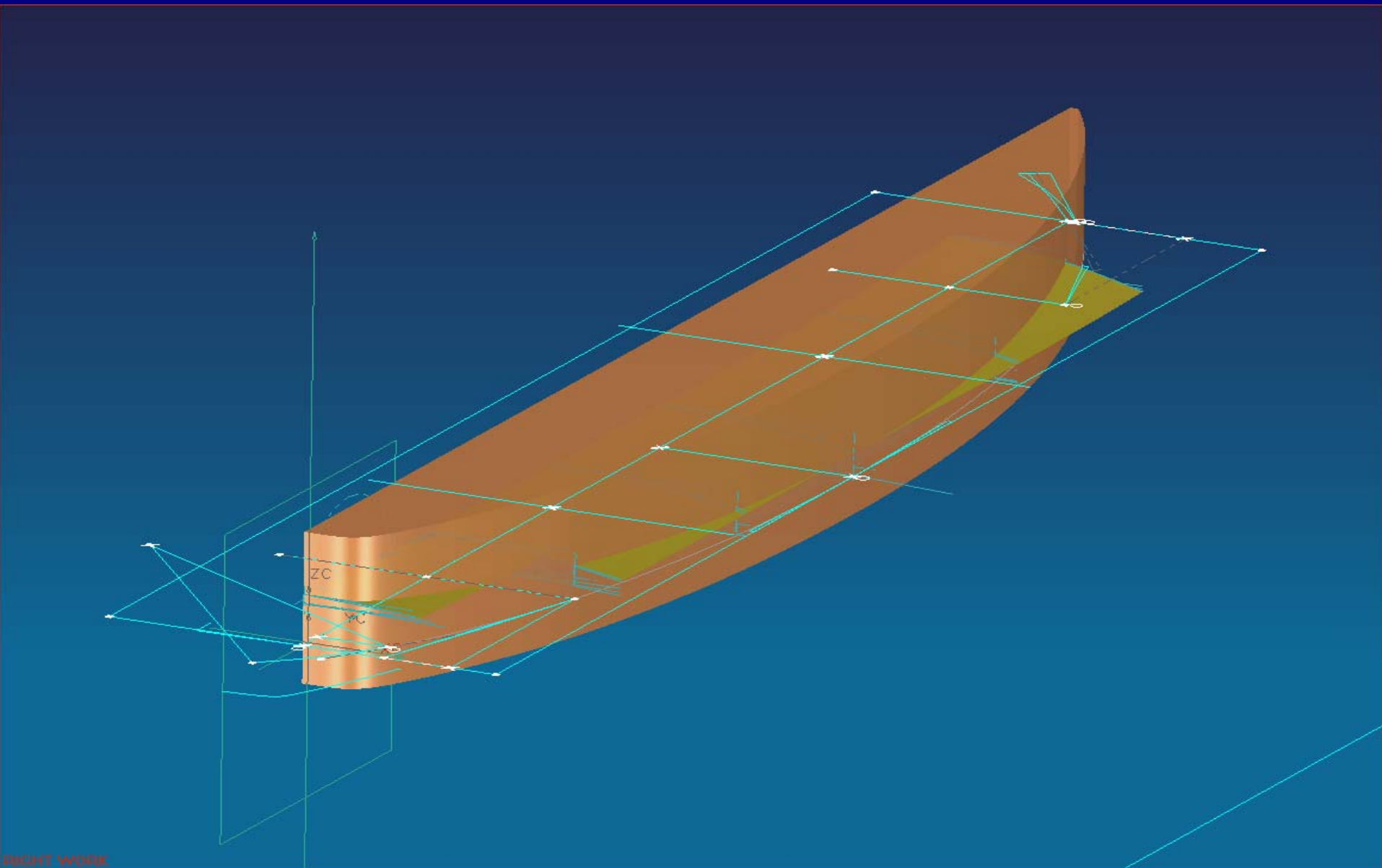

RIGHT WORK

Develop Rail Surfaces

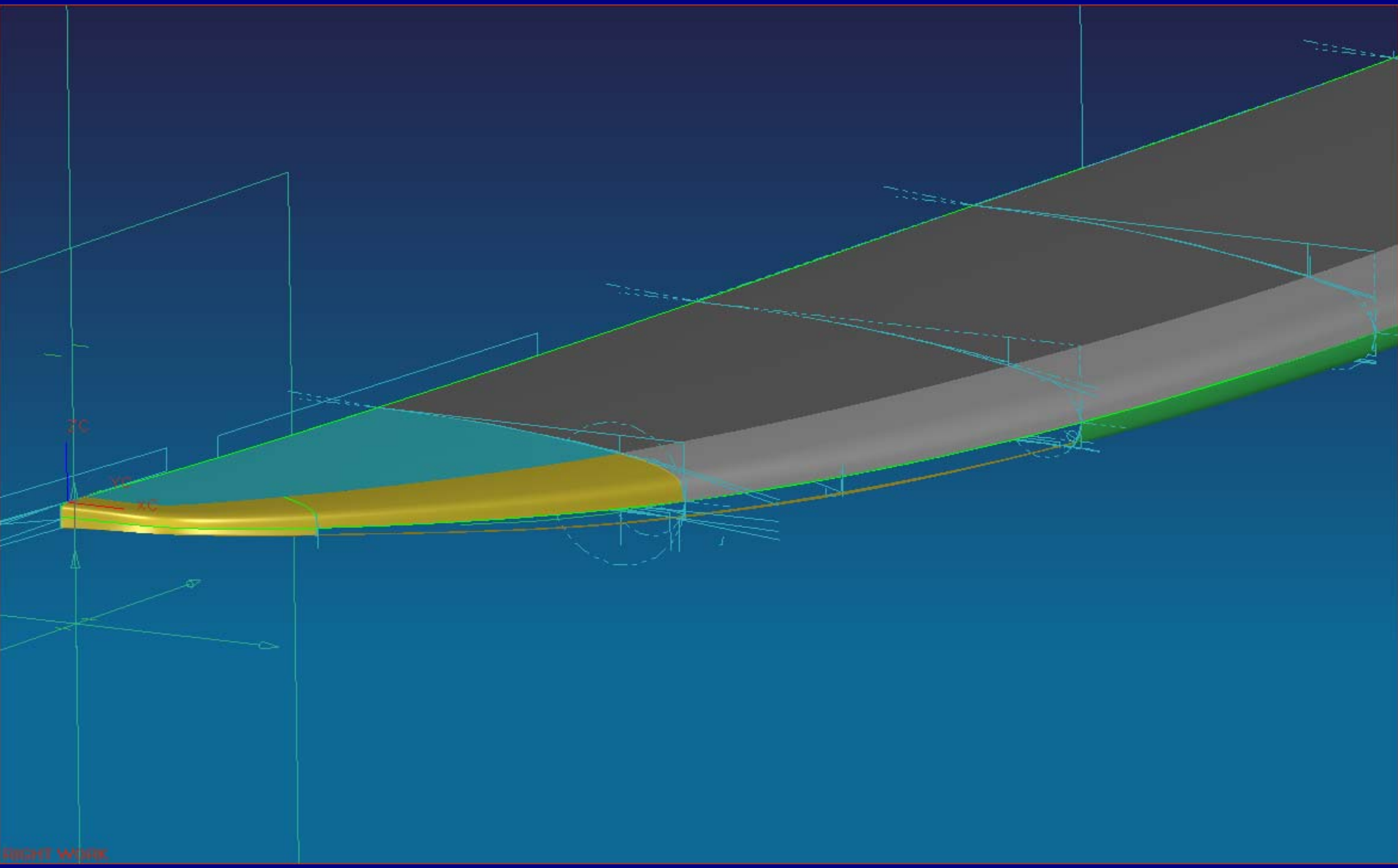

Finished Board With Major Sections

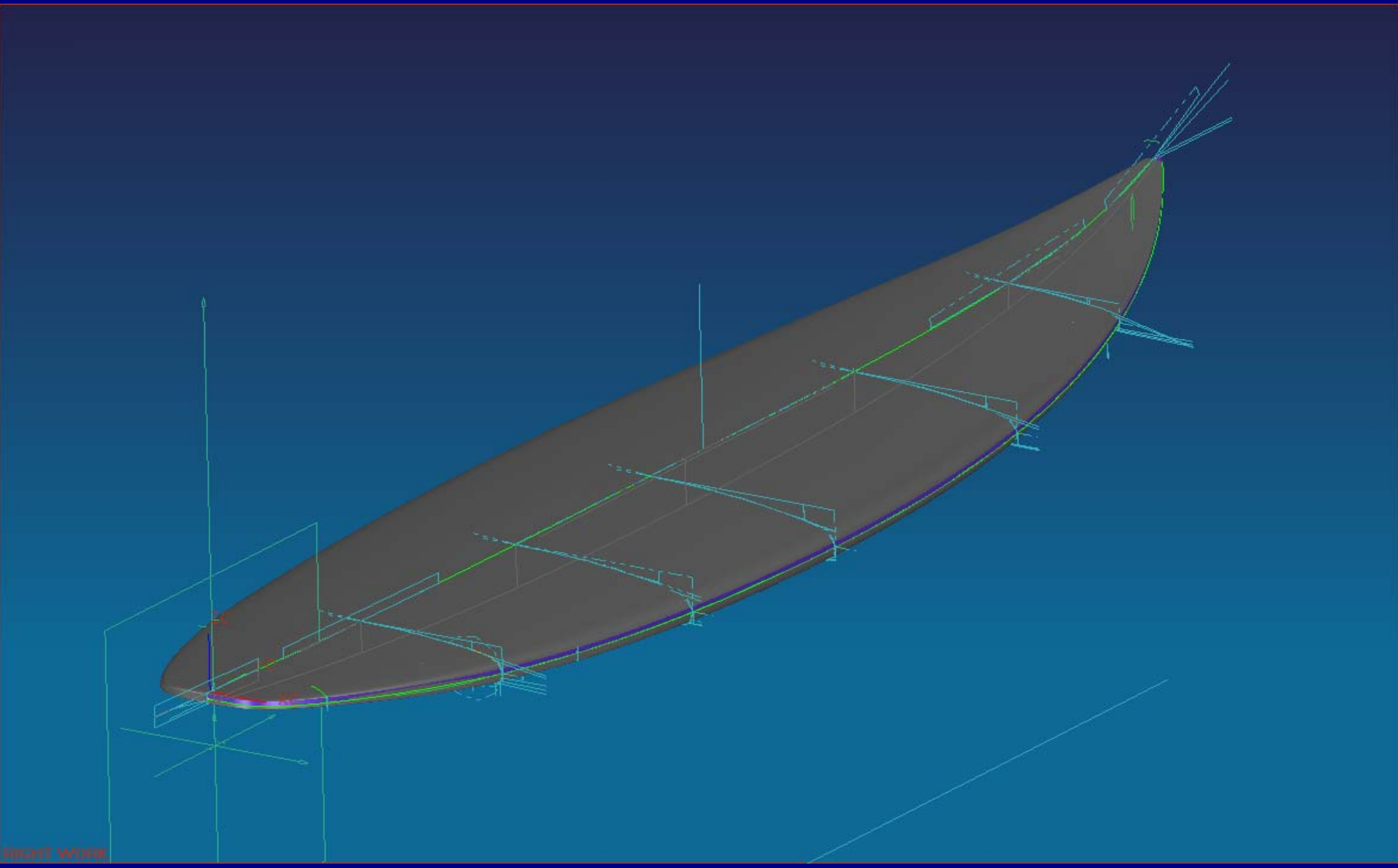

Demonstration

- Live UG NX
- Developing a Parametric Board Model
- Questions At End
  (*but if you really can't wait, just Yell it out*)
- Thanks for Attending