UGS CONNECTION

AMERICAS 2008

PLM WORLD®
The Voice of Siemens PLM Software Users Worldwide

Siemens PLM Software

SIEMENS

The Road to 3D PMI

Gili Omri
LSRD Technion

Technion - Land System R&D Division

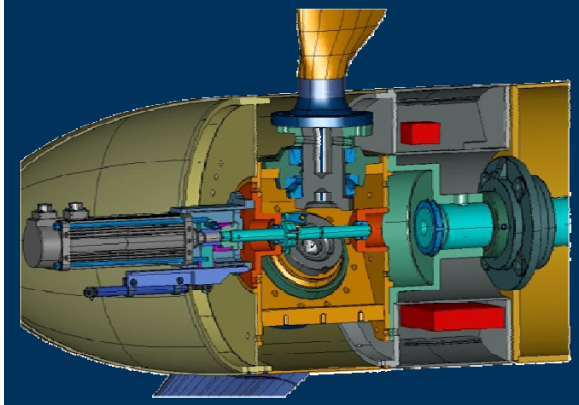

Materialization of Academic Research projects

Connecting link Academy to Industry

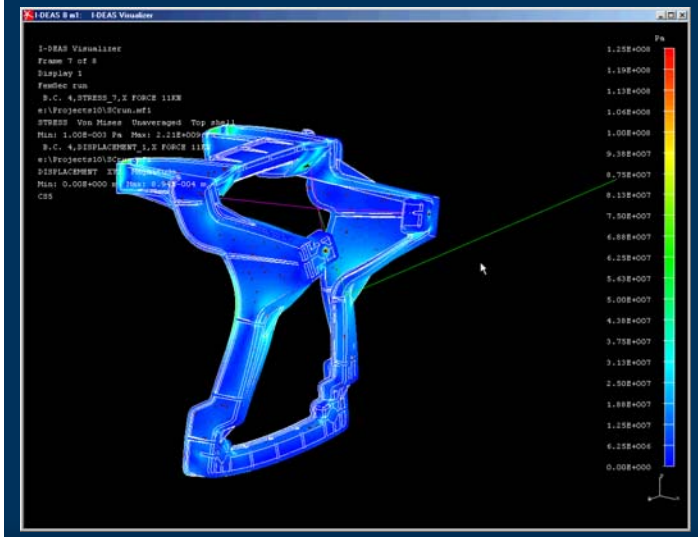

Broad band of R&D Services

Abstract

UGS CONNECTION AMERICAS 2008

PMI – (Product Manufacturing Information)

The new buzzword

What does it actually stand for?

Where is the gain?

Why Change?

And if so

HOW?

A quick glance at PMI

From the organization perspective & The trenches

What is PMI?

UGS CONNECTION
AMERICAS 2008

Product **M**anufacturing **I**nformation

Information required to **put across design intent** to **production**

PMI Consists:

- Dimensions (tolerances for each dimension)
- Geometric tolerances of features (datums, feature control frames)
- Manufacturing information (surface finish, welding notation)
- Inspection information (key location points)
- Assembly instructions
- Product information (materials, suppliers, part numbers, bill of materials, revision history)

Integrated PMI Vision (UGS)

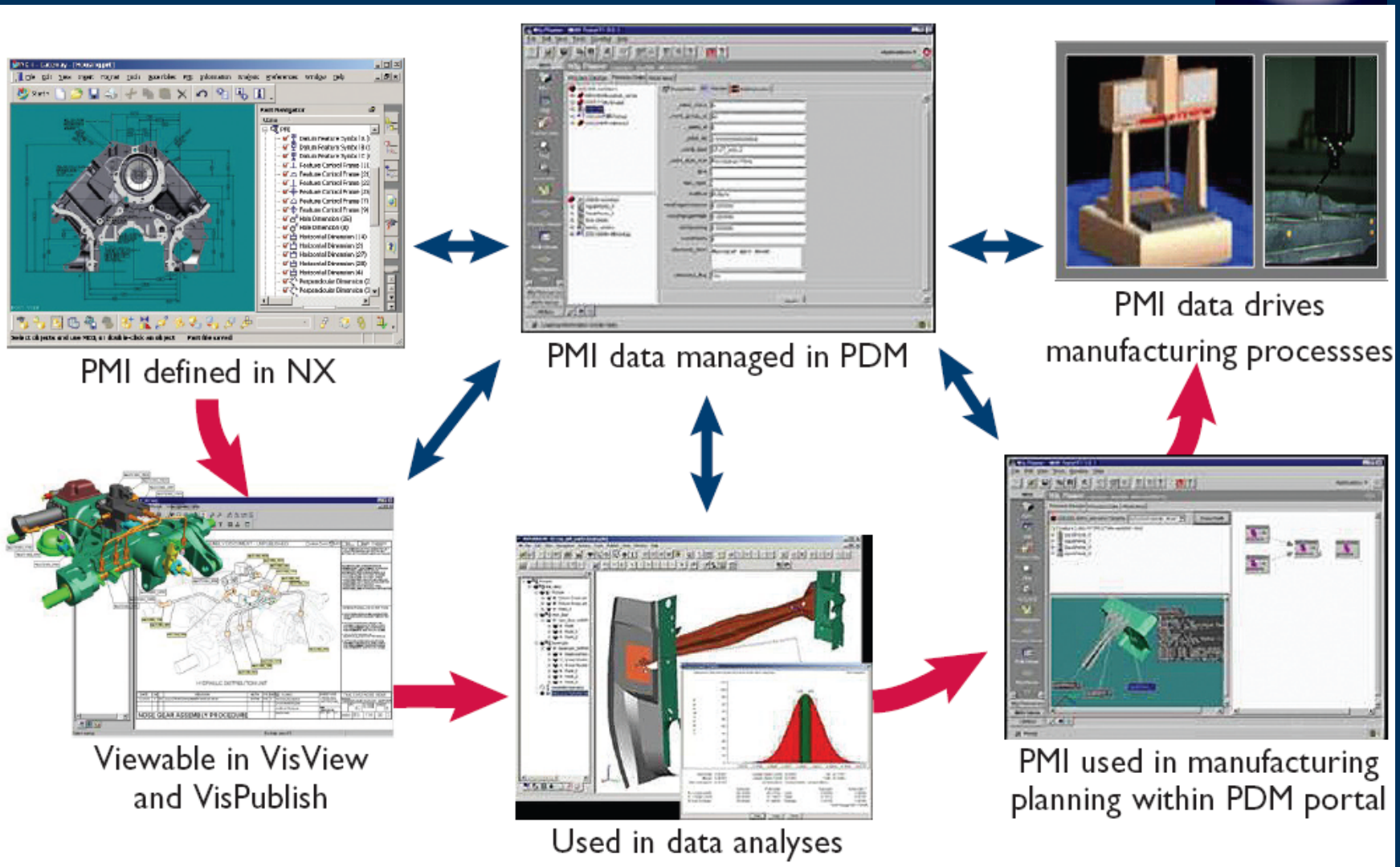

Benefits of 3D PMI

- *Enhances and shortens the design cycle*
- Fewer errors
- Streamline design/manufacturing processes
- Faster change management
- *Accelerates decision making*
- Remove drawings from the supplier communication chain

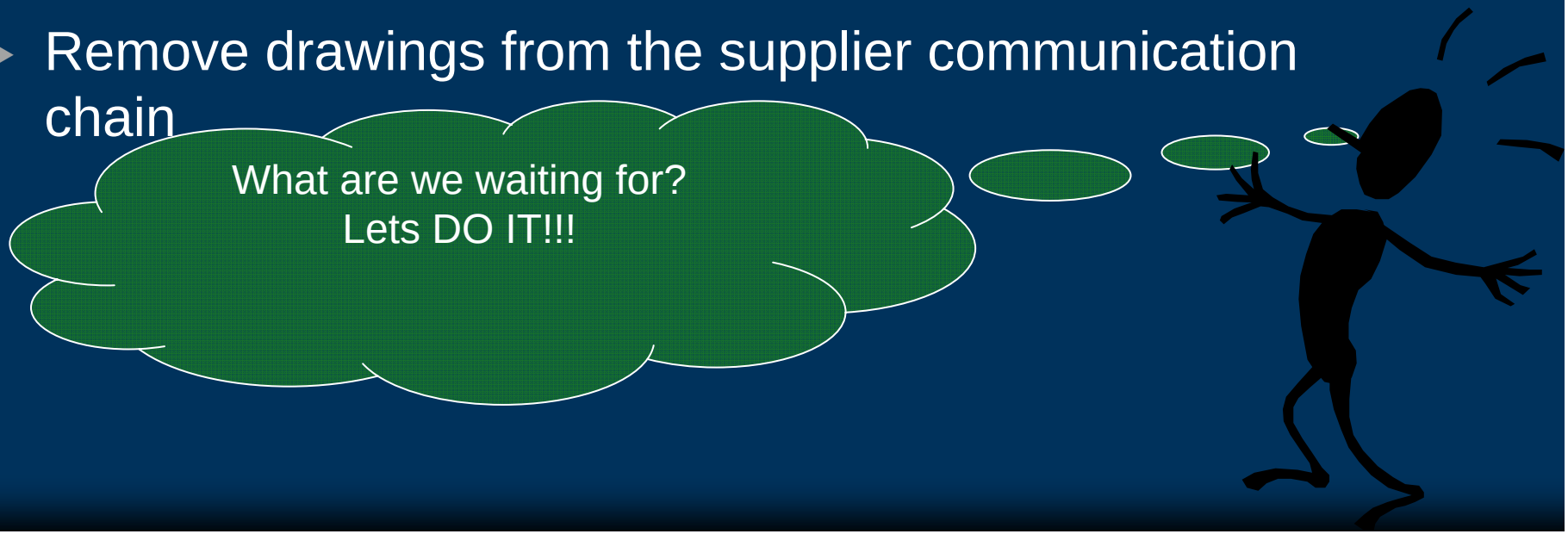

Now What?

- Faster Product development
- Reduced Cost
- Better success rate
- Reduce Engineering Change cycle time

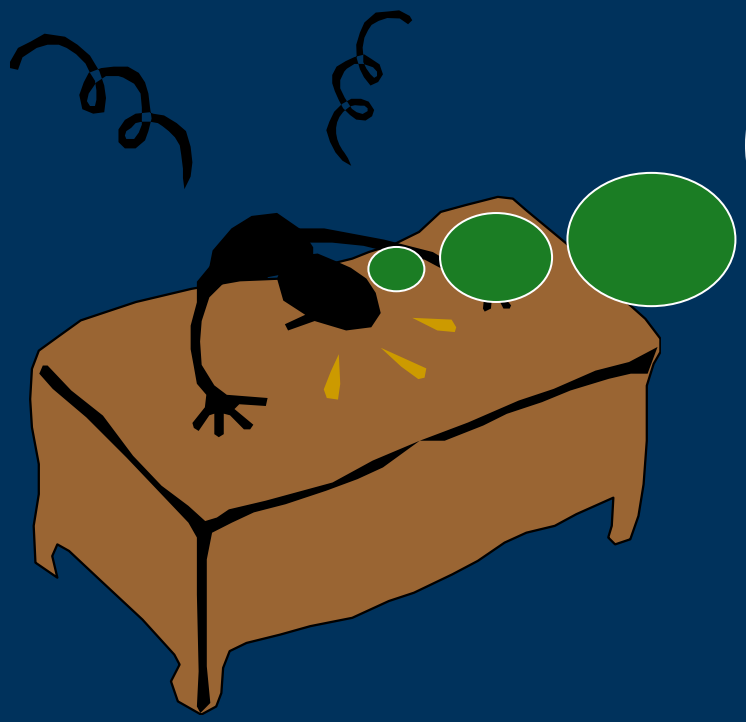

It Sounds so familiar…
Is it really worth it?

BUY new software - **$**

Devise new process – **$**

Training costs - **$**

Downtime during the above
$$$

Justifying new Technology

Technology can bring ***benefit***

if, and only if

it diminishes a ***limitation***.

Long before the availability of technology,

we developed modes of behavior

(policies, measurements and rules)

to help us accommodate our limitations.

After being Dazzled (and dismayed)

STARTING THE QUEST TO 3D PMI

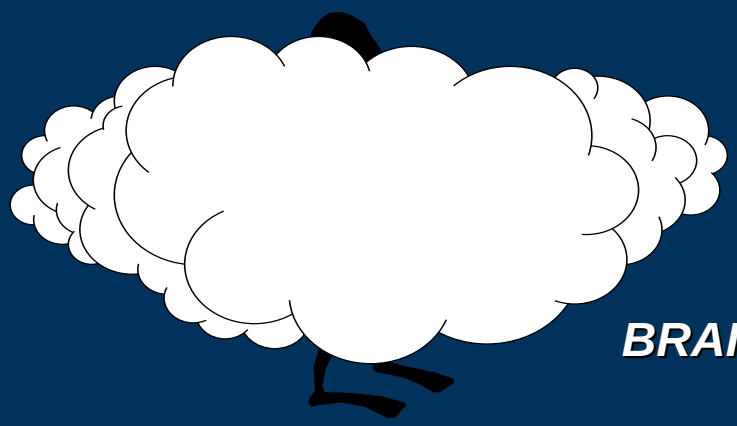

BRAINSTORMING

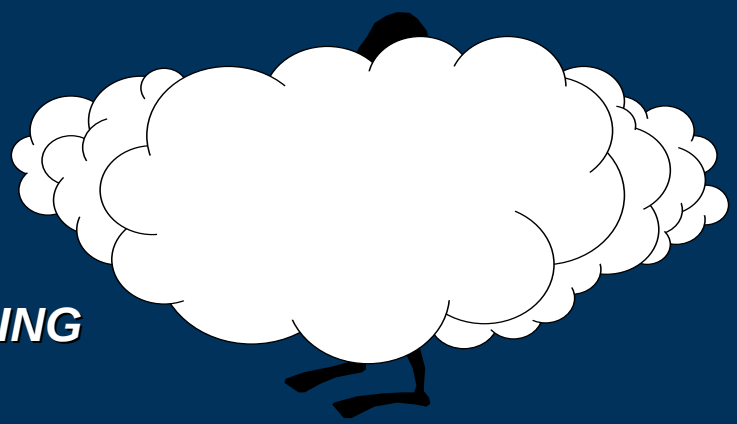

Existing limitations

- Product documentation process requires a significant investment.
- Data redundancy (in drawings)
- Data inconsistencies (drawing - 3d models)
- Interpretation errors (of drawings)
- Time consuming change process (2D<->3D)

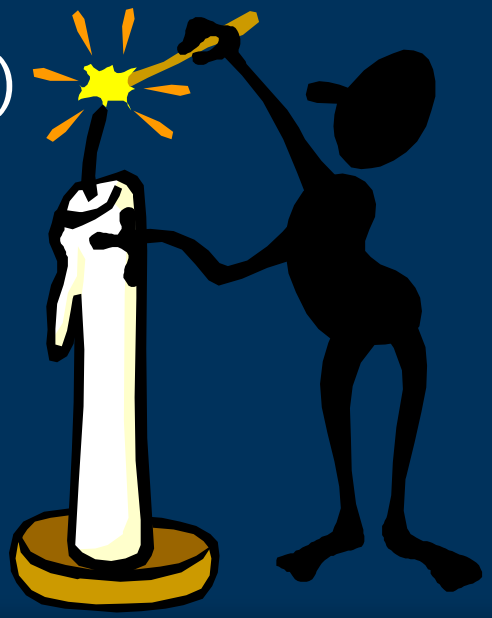

Our Path to enlightenment…

Learn the good book
ASME Y14.41

Self paced 3D PMI Training
I-Deas / NX

Benchmark a mini project
(~60 drawing items)

Evaluate

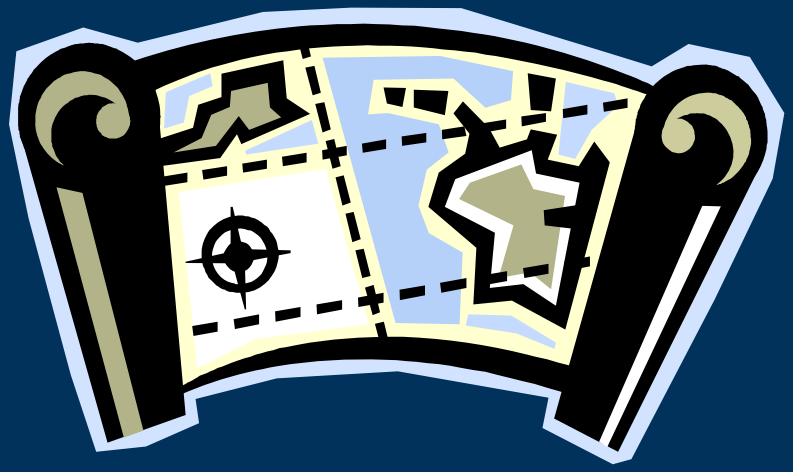

ASME Y14.41-2003
Digital Product Definition Data Practices

- ASME Y14.41 is an extension of existing ASME standards
- Two possible modes:
  - **3.3.1 Model Only**
  - **3.3.2 Model and Drawing**
- **Some requirements are applicable to models ONLY**
  - **Caution!! down streaming PMI to drawings with care.**

I-DEAS / NX – 3D PMI

- Both packages comply with ASME standards
  - Had fun playing with new toys
  - Liked I-DEAS Model Views Better
- It was not a trip through the park
  - Online documentation is not sufficient
  - Training is not to be over looked!!!

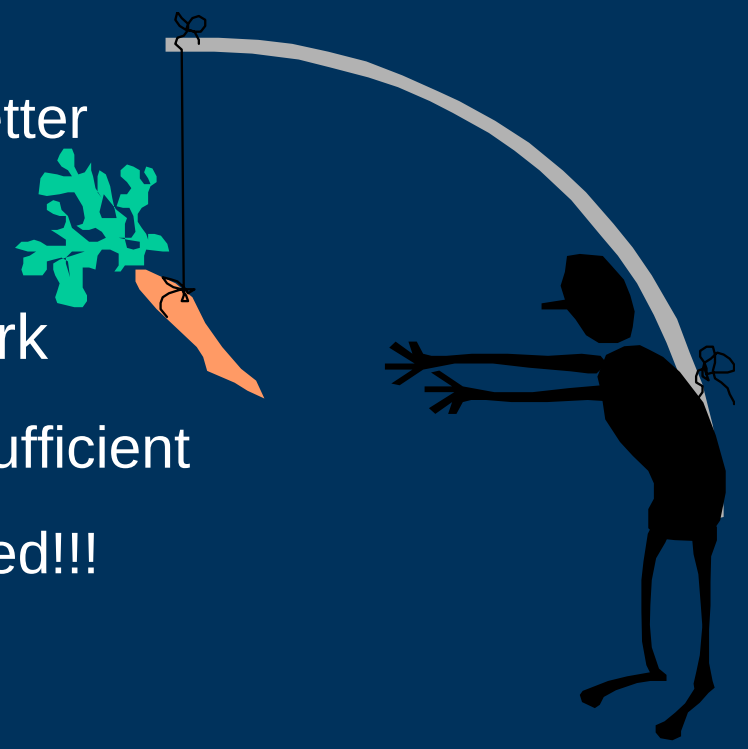

Typical Project

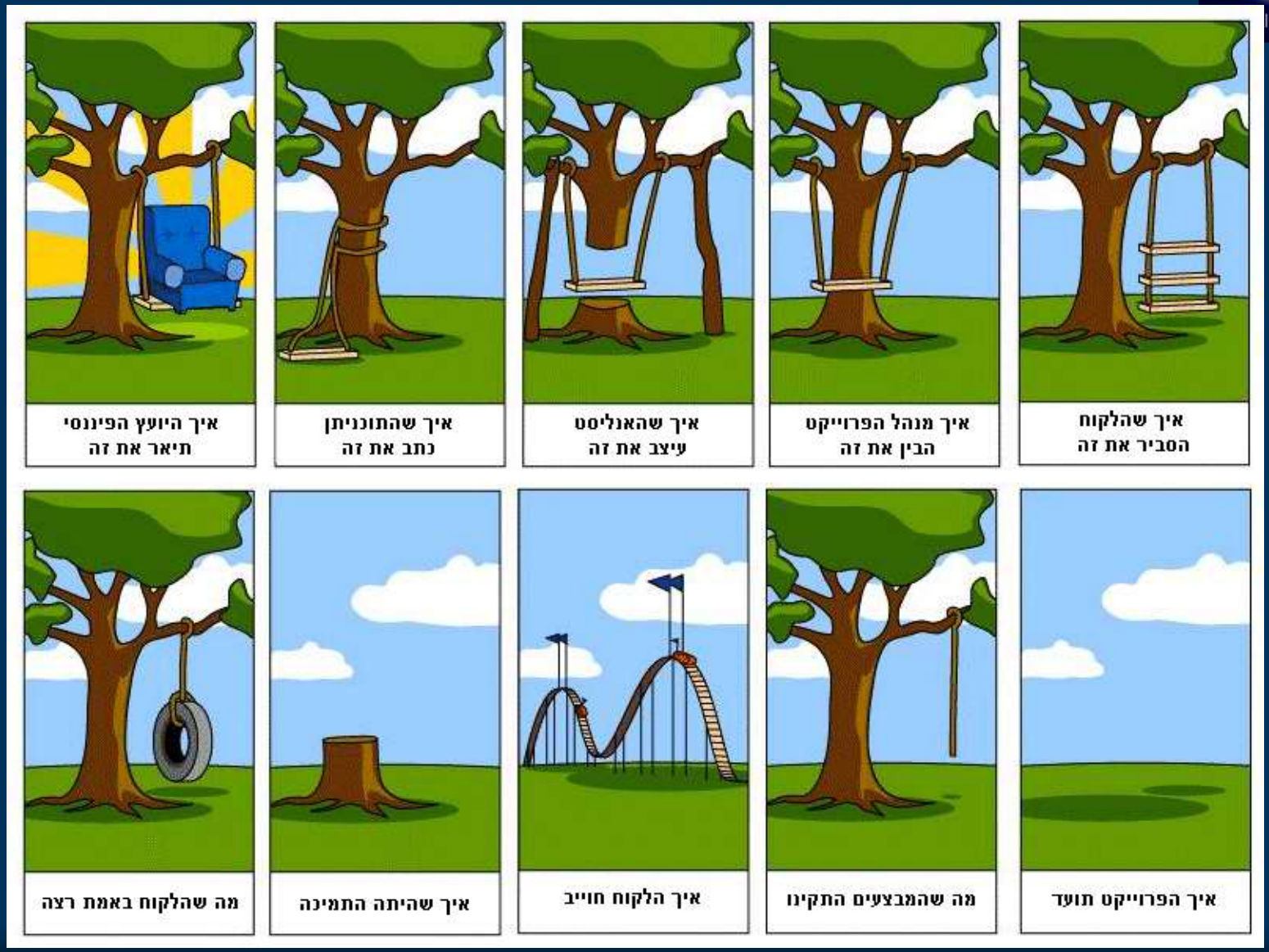

Mini project

- Syntax checker helped eliminating common errors
- Braking of old habits was not easy
- Once we did:
  - Decreased documentation effort
  - We had Fewer errors
  - **Streamline design/manufacturing processes**
  - Faster change management

Common workflow

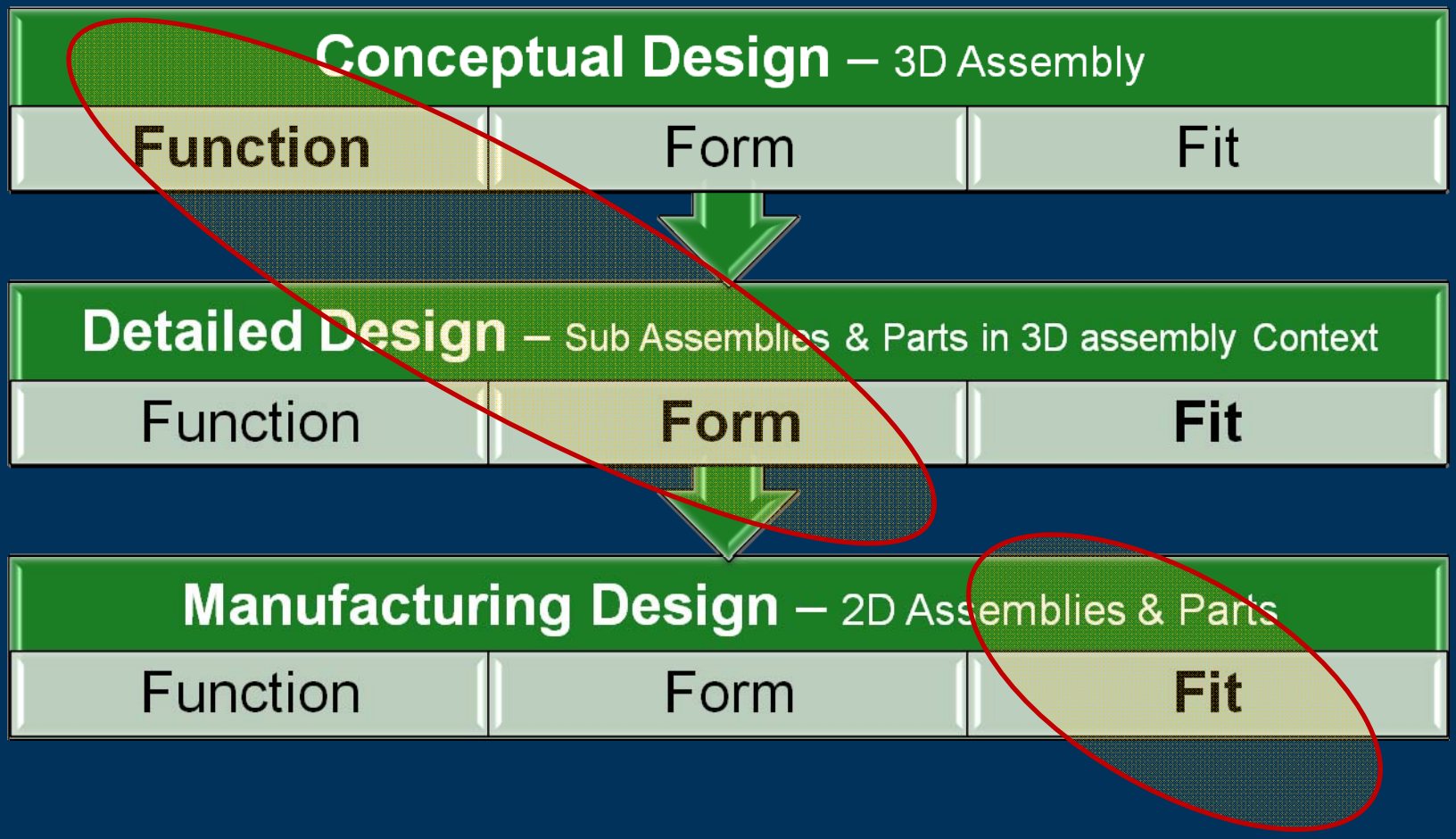

PMI workflow

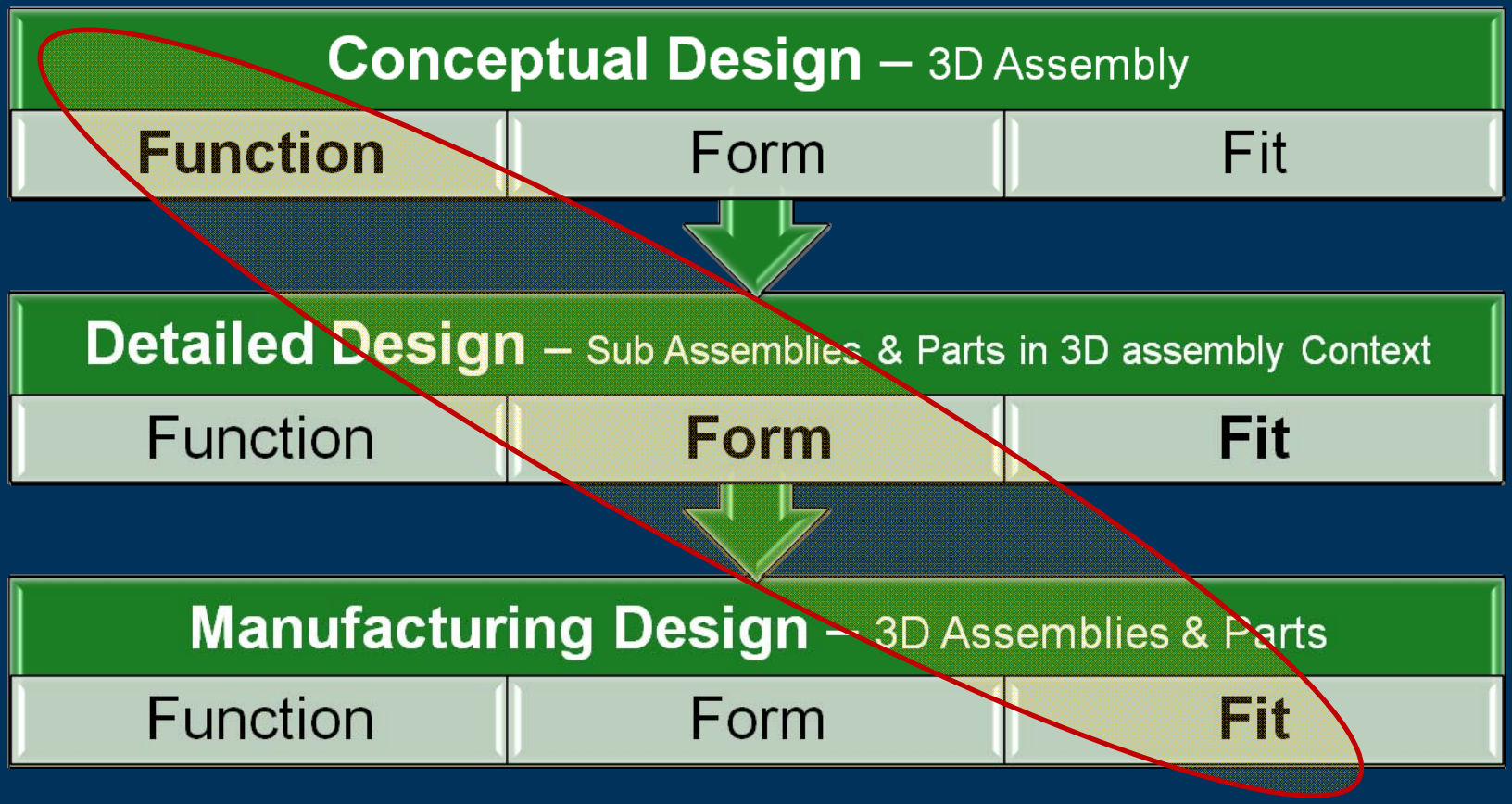

Greatest benefit of 3D PMI

- GD&T is about – Interchangeability
- Working on Parts directly in the assembly allows:
  - The designer to concentrate on FFF
- A step forward to PLM Vision

"A single source of truth

The whole truth

and Nothing but the Truth"

Road Blocks

- In House:
  - Training
  - Culture
  - Infrastructure (data management) – communication?

- Suppliers / Workshop
  - Hardware
  - Knowhow
  - Culture!!!

UGS CONNECTION

AMERICAS 2008

PLM WORLD®
The Voice of Siemens PLM Software Users Worldwide

Siemens PLM Software

SIEMENS

Questions?

Comments?