UGS CONNECTION

AMERICAS 2008

PLM WORLD®
The Voice of Siemens PLM Software Users Worldwide

Siemens PLM Software

SIEMENS

VisVSA
Datum at Virtual Condition with Refinement

Mark Foster, President, AGI

Norm Crawford, Instructor, AGI

UGS CONNECTION AMERICAS 2008

Applied Geometrics Inc.

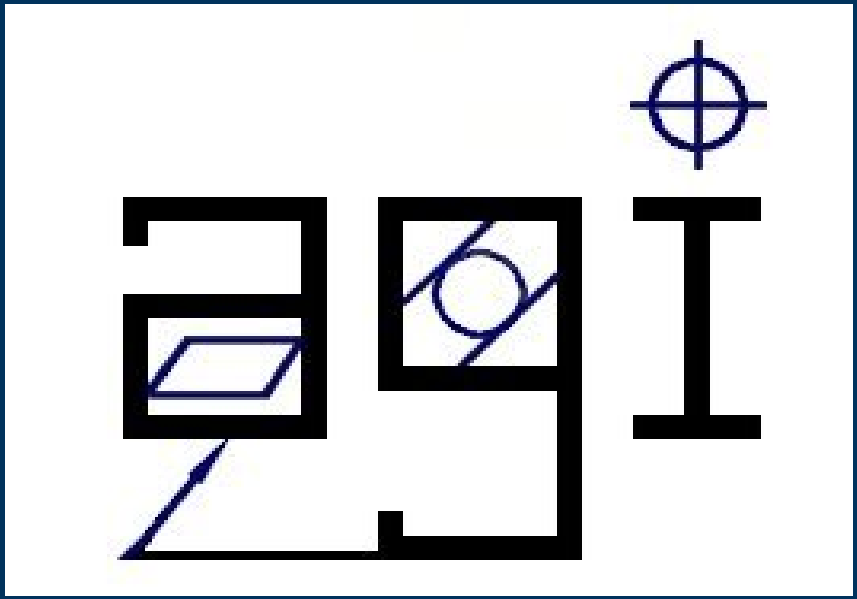

(708) 867-5927

www.GDandT.com

Applied Geometrics, Inc. Mission Statement

- Applied Geometrics, Inc. is committed to train manufacturing industry's personnel how to realize a higher return on investment by utilizing a standardized, concise, internationally accepted language of engineering expression.

MMC Virtual Condition

- The collective effect of the **MMC limit of size** of a feature and any **applicable geometric tolerance**.

MMC Virtual Condition
Internal Feature (Hole)

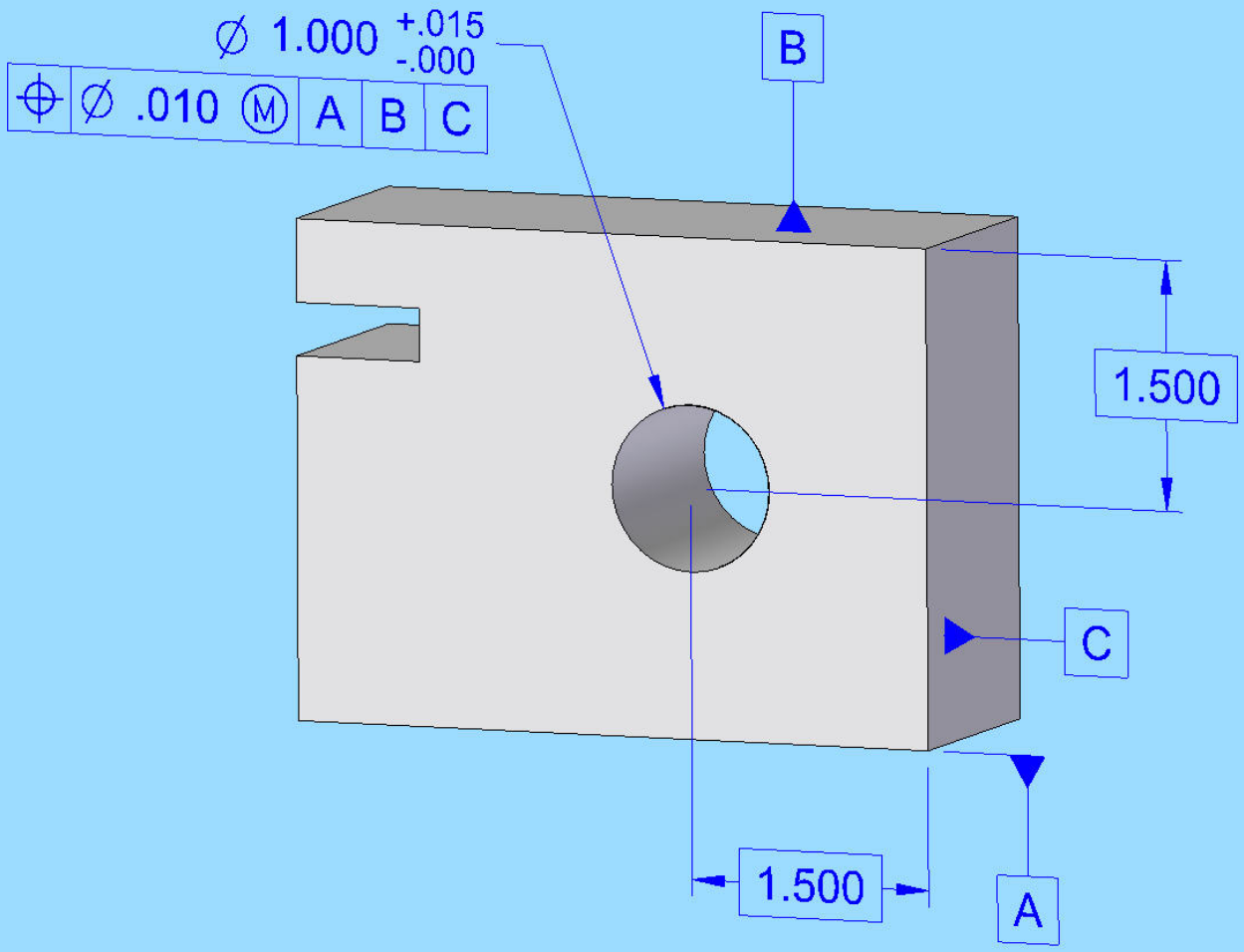

MMC Virtual Condition Math (Internal Feature)

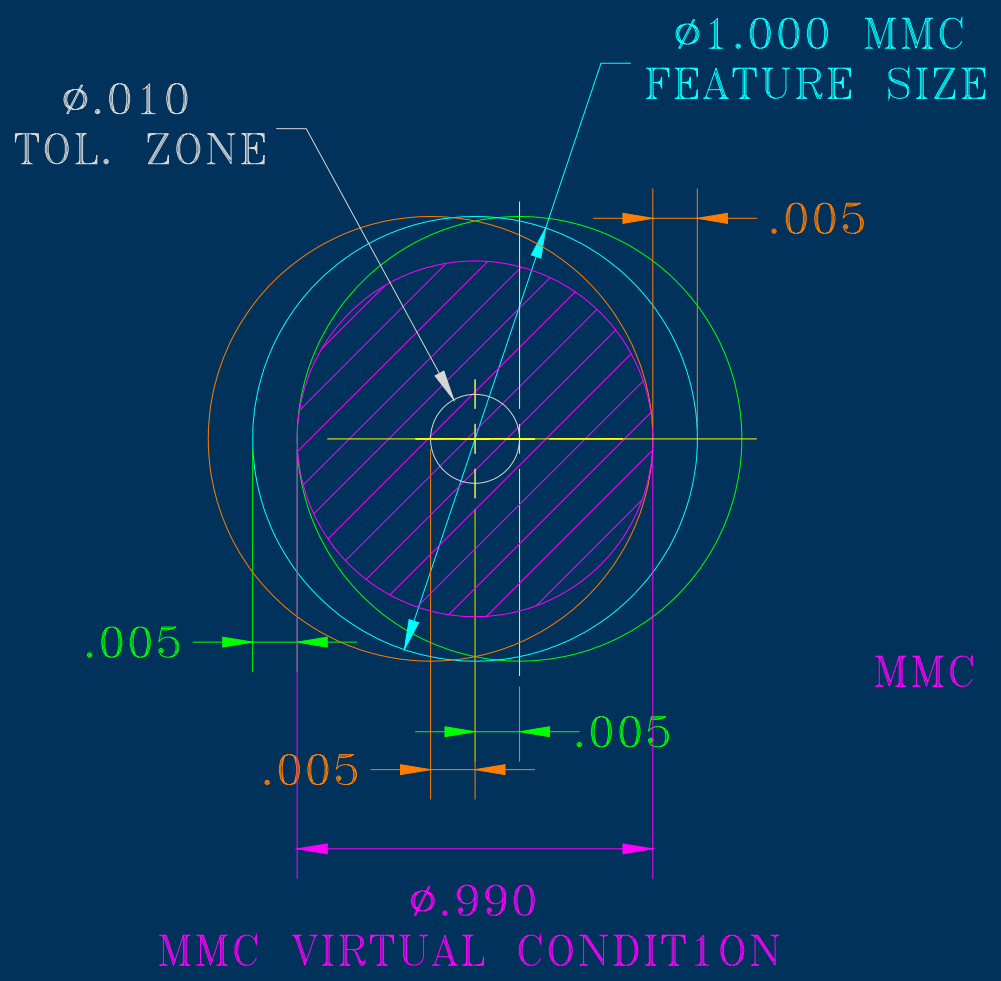

ø1.000 MMC FEATURE SIZE
−ø.010 TOLERANCE ZONE

ø.990
MMC VIRTUAL CONDIT1ON

Constant Size Inner Boundary

MMC Virtual Condition Math (Internal Feature)

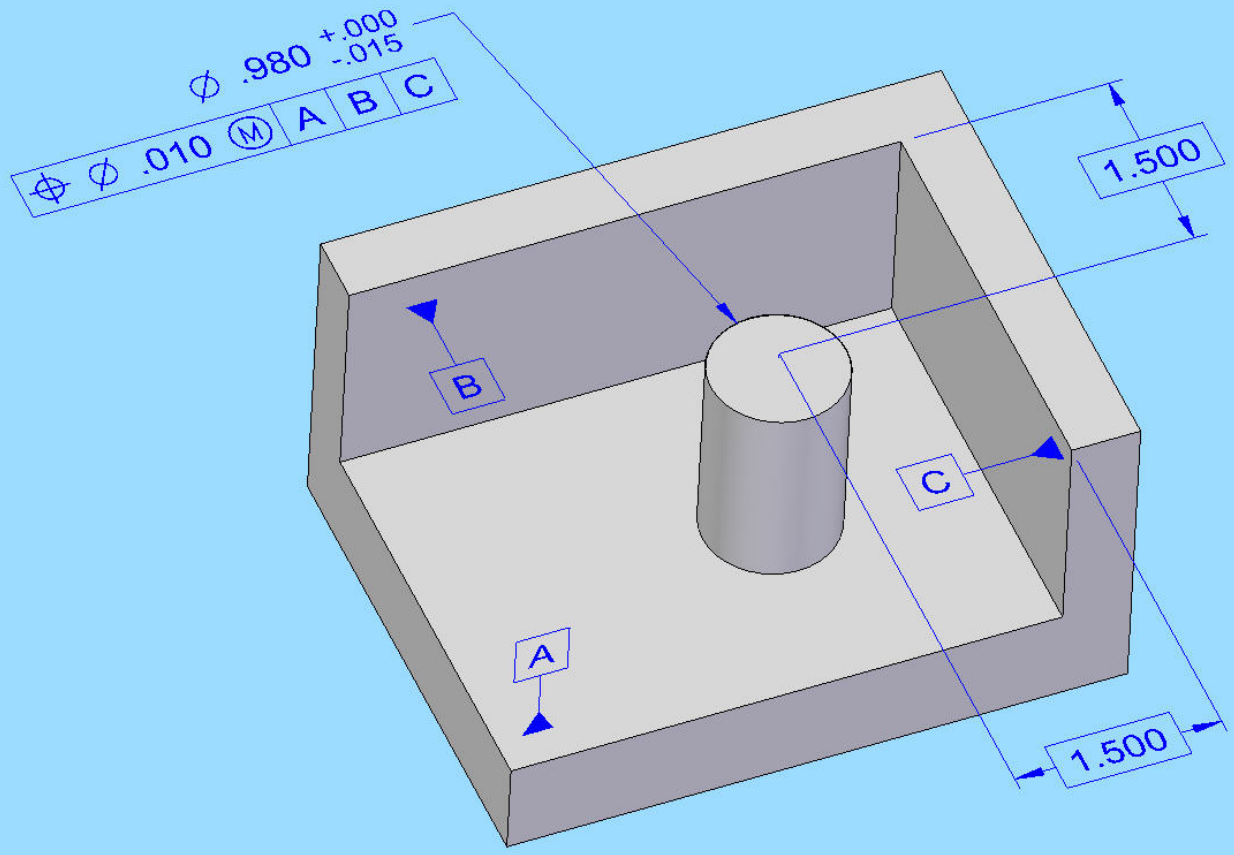

MMC Virtual Condition Math (External Feature)

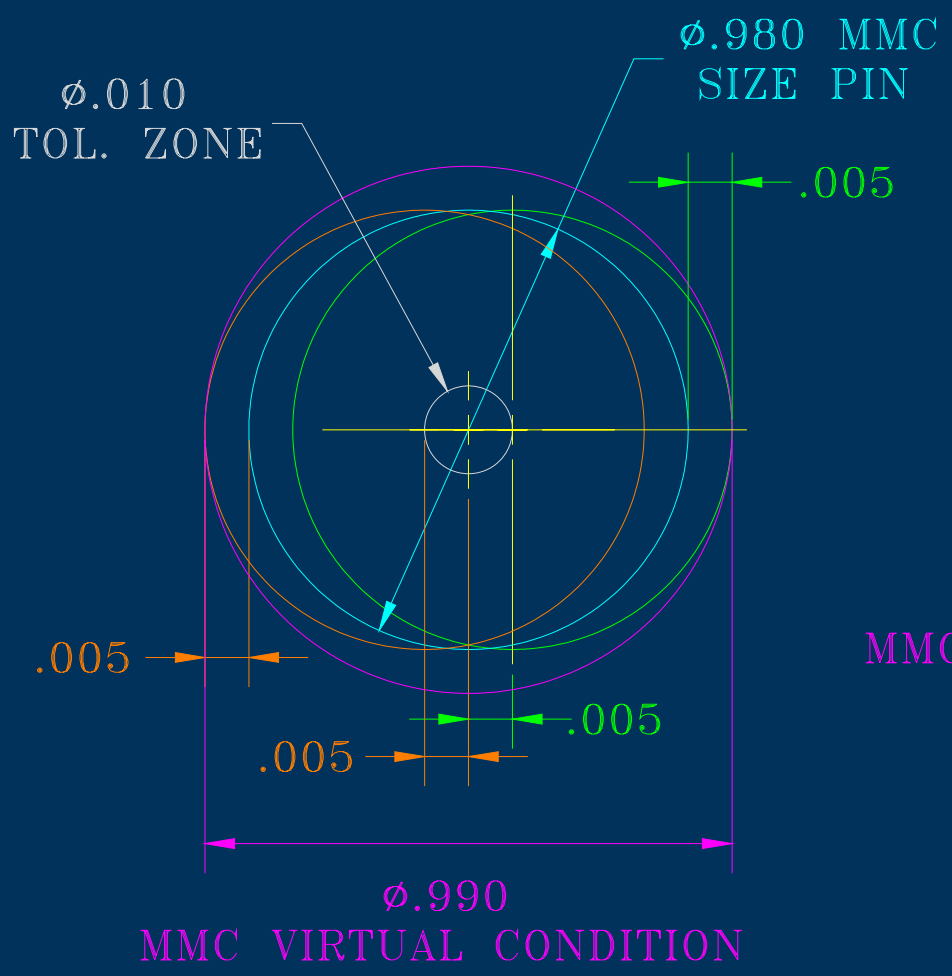

ø.980 MMC FEATURE SIZE
+ø.010 TOLERANCE ZONE

ø.990
MMC VIRTUAL CONDIT1ON

Constant Size Outer Boundary

Actual Mating Envelope

- The “effective” size of a feature is influenced by variations in its form, orientation and location as well as size
  - The worst case of which is the feature’s Virtual Condition

Actual Mating Envelopes

- Actual Mating Envelope
- “Orientation-Constrained” Actual Mating Envelope
- “Location-Constrained" Actual Mating Envelope

AME Illustration

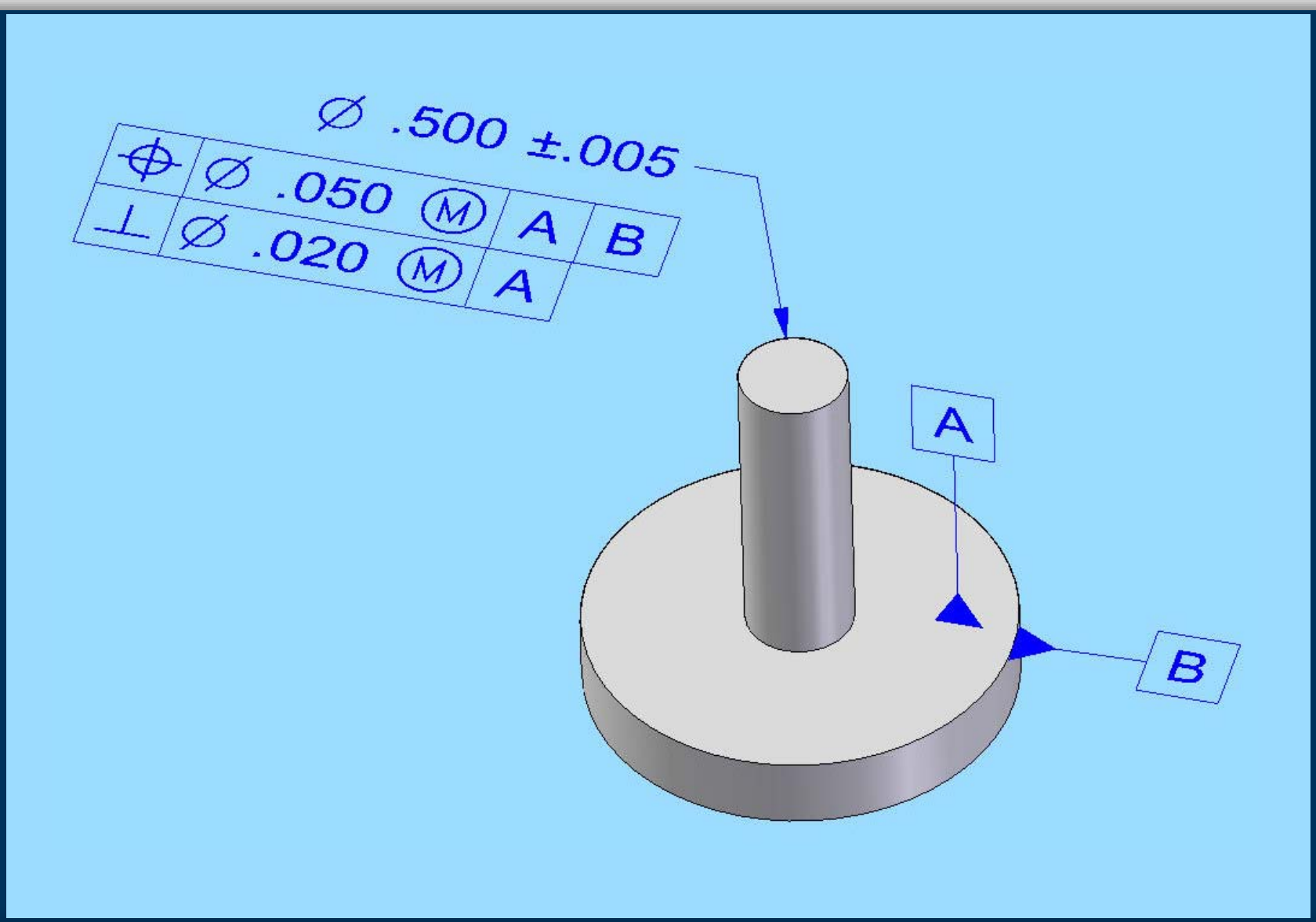

AME Illustration

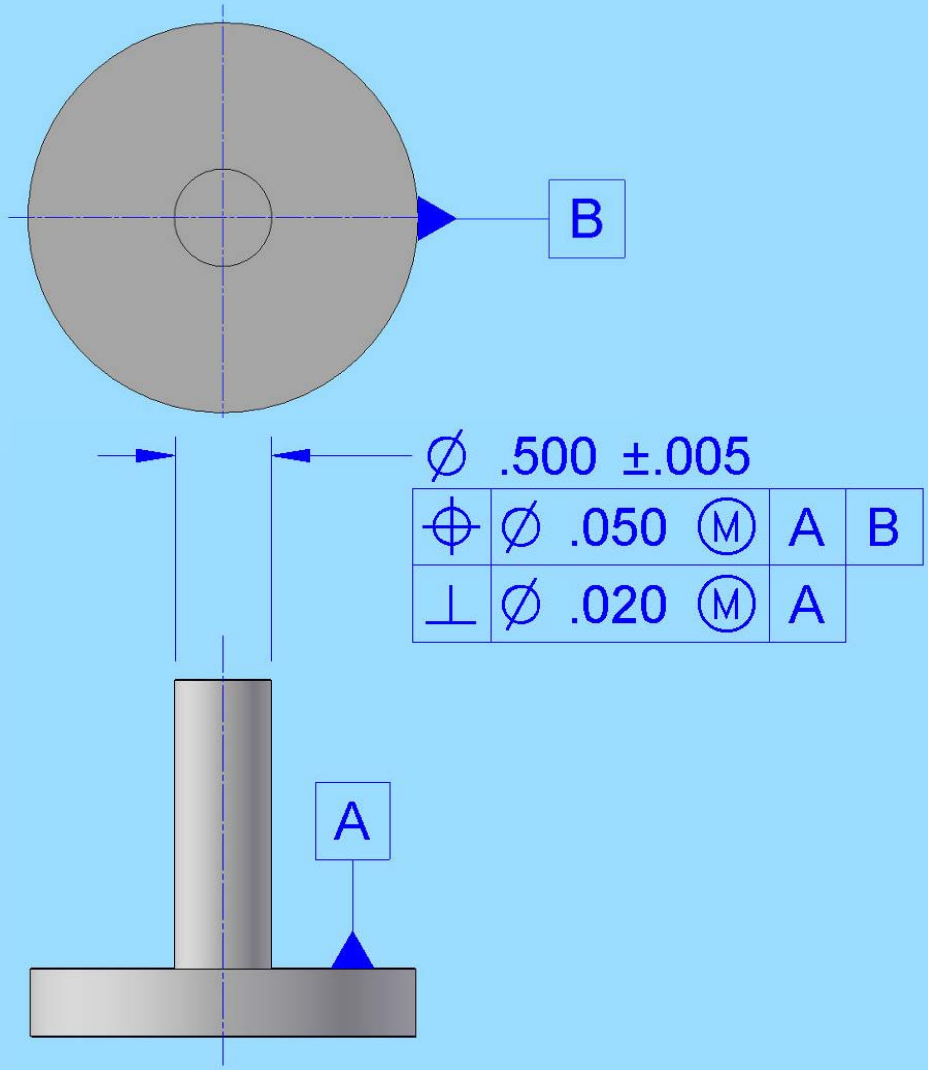

Actual Mating Envelopes

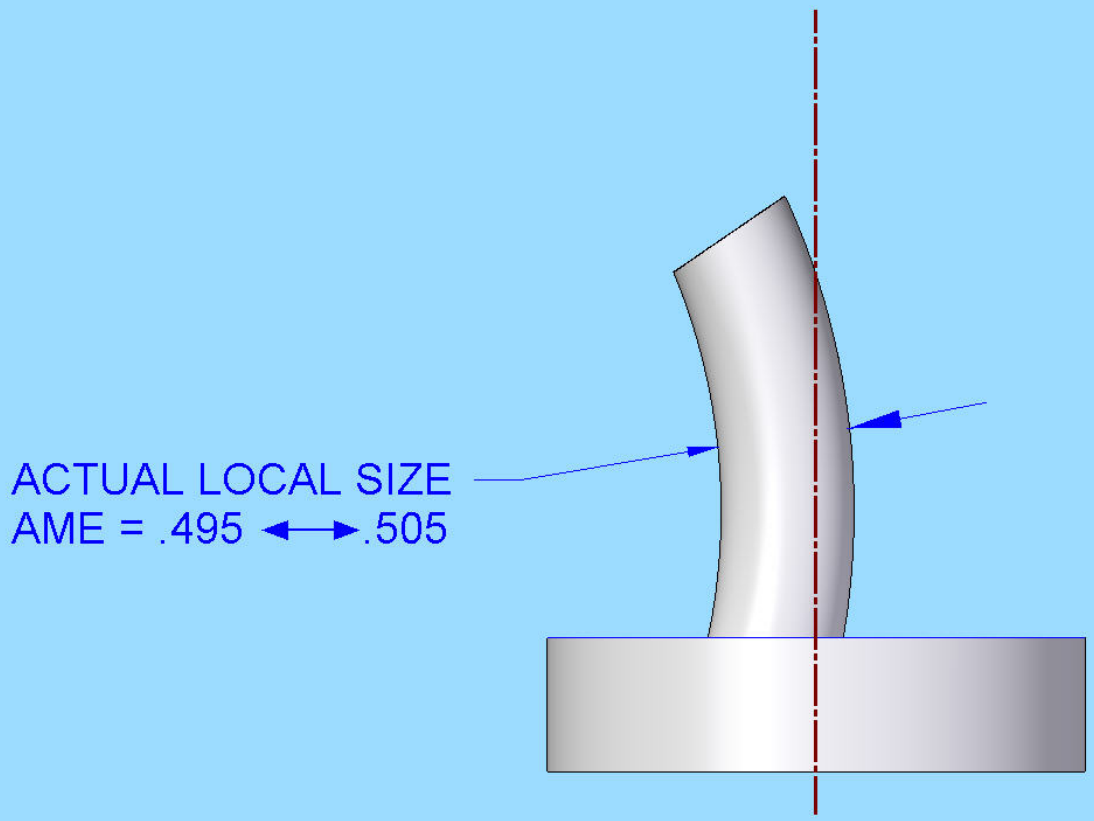

Actual Mating Envelopes

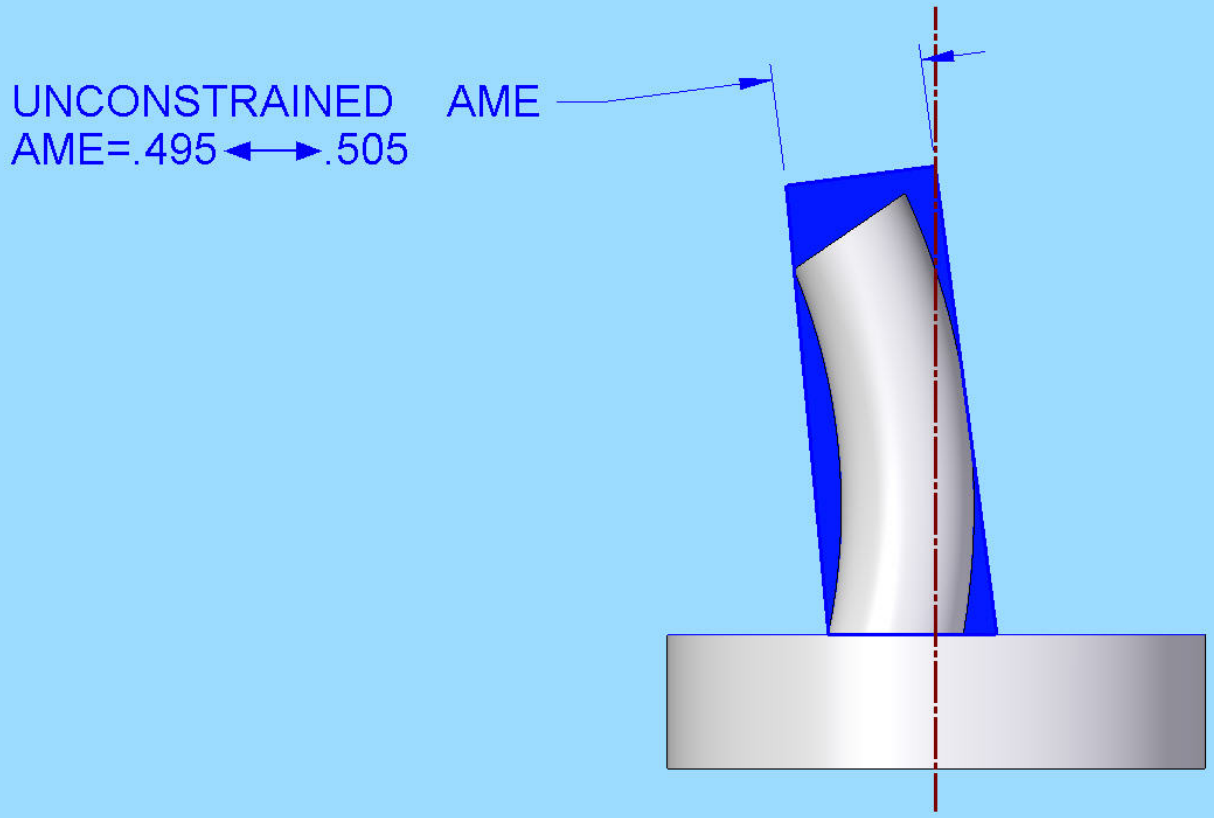

Actual Mating Envelopes

ORIENTATION CONSTRAINED
AME=.495 ◄—► .525

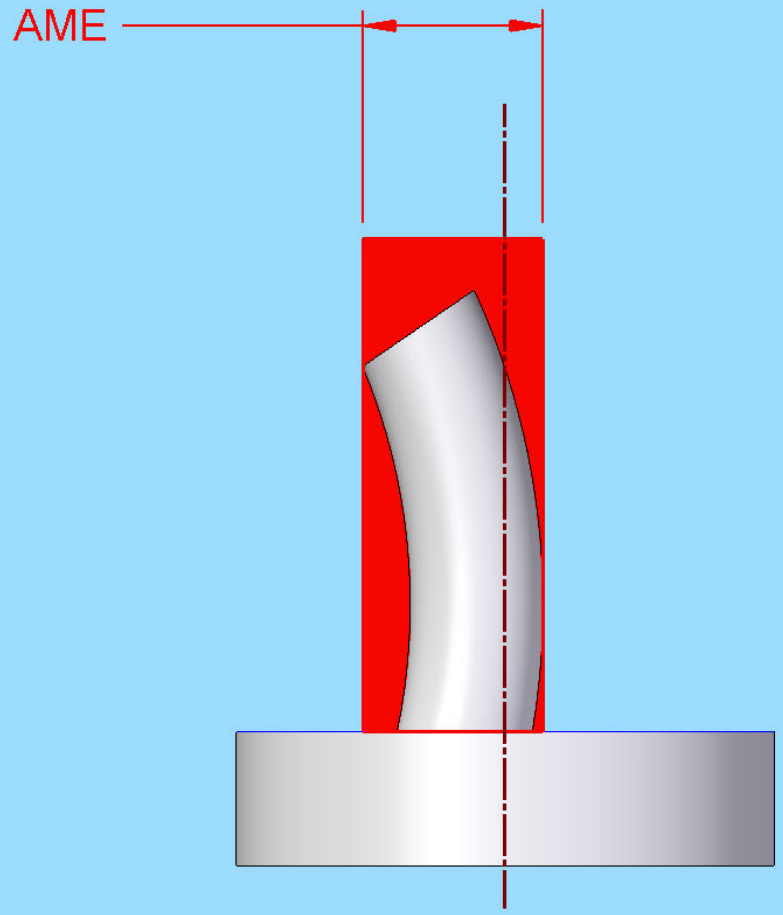

Actual Mating Envelopes

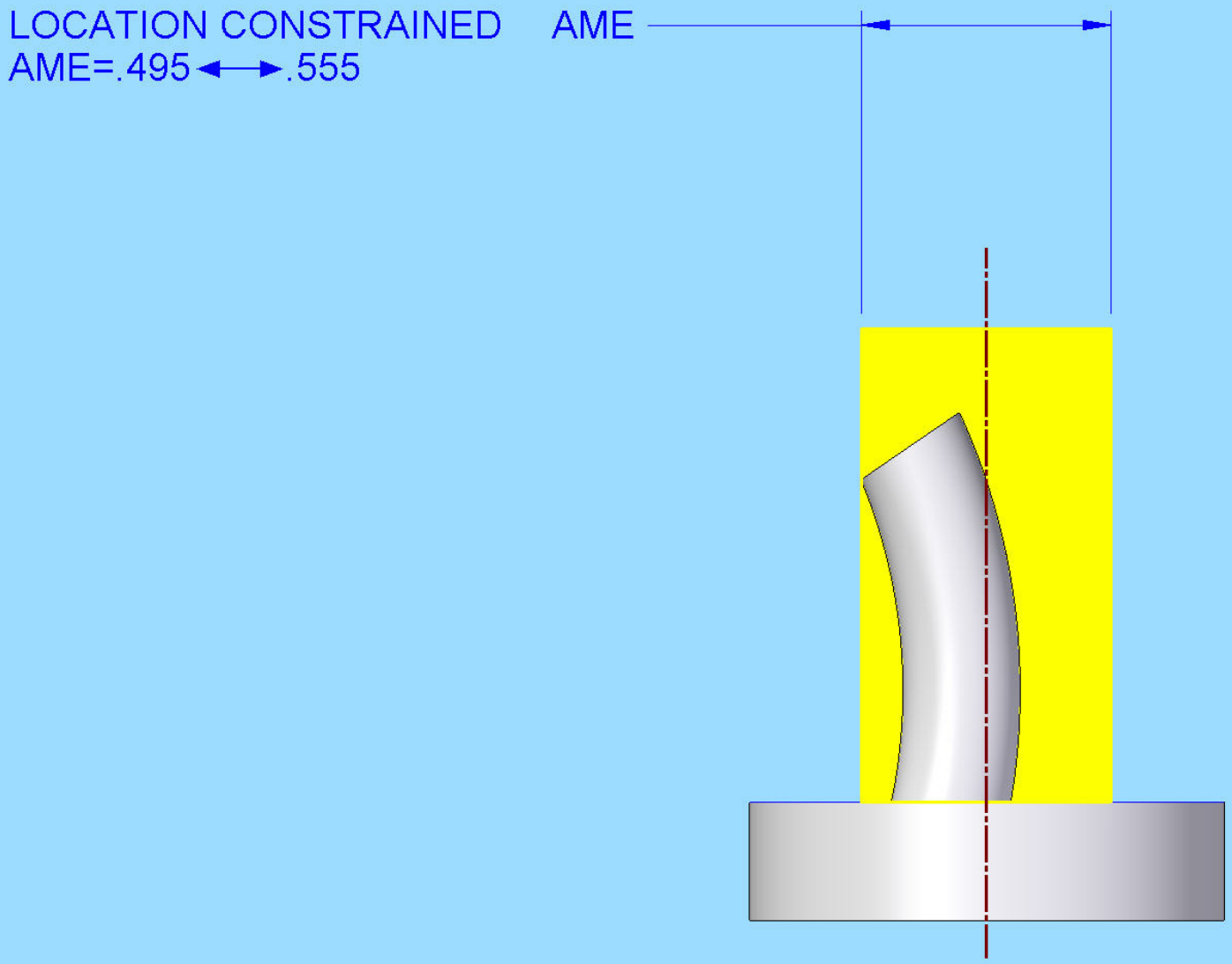

Actual Mating Envelopes

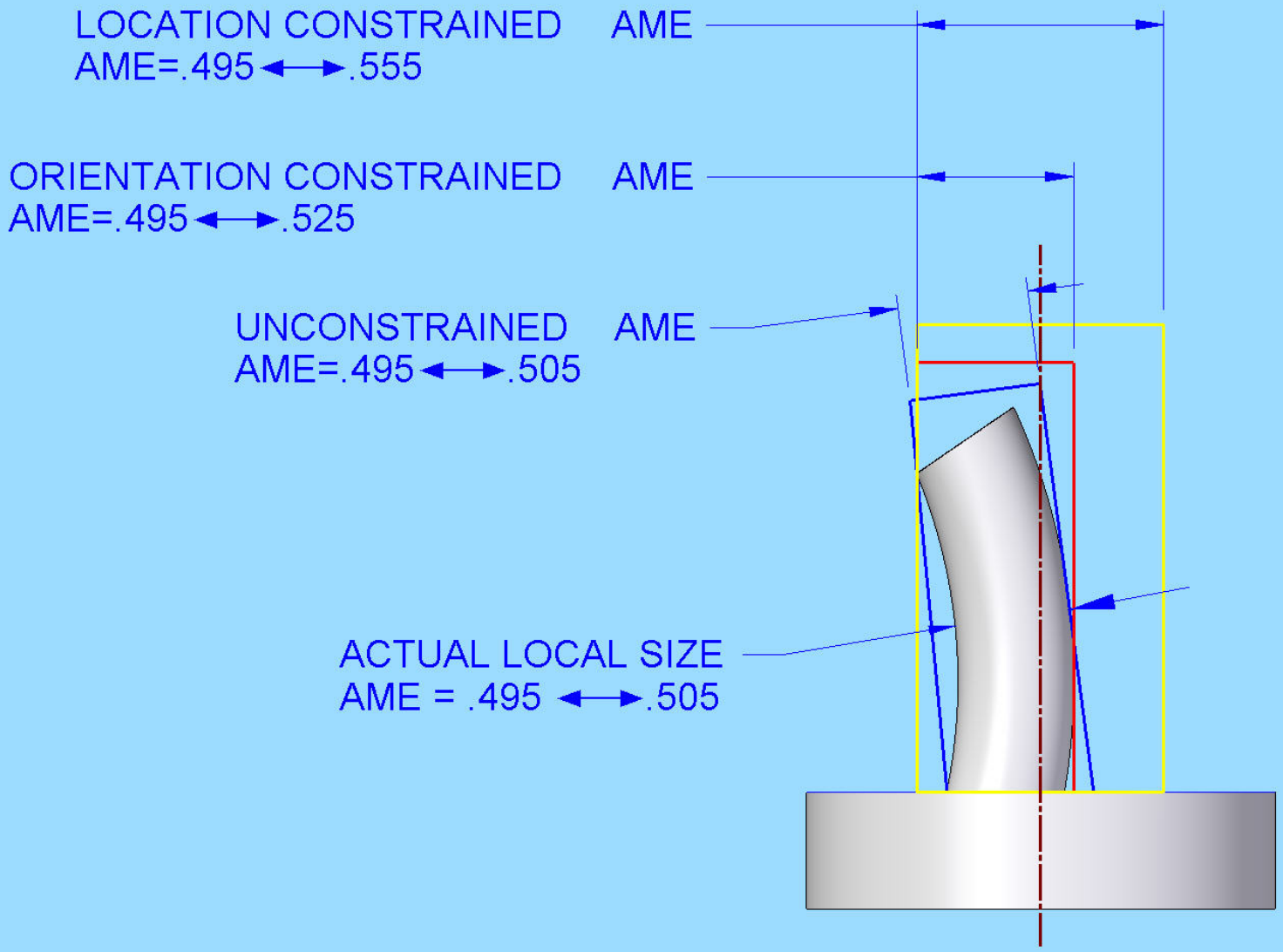

Datum at Virtual Condition Rule

- In certain situations, coordinate system mobility (MMC or LMC modifier in the DRF of a FCF) will only be **physically** realized as the Datum feature departs from its Virtual Condition, not as it departs simply from its size limit.

The Considered Datum Reference Must…

1. Be a feature of size and referenced in a FCF at MMC or LMC
2. Be a secondary or tertiary datum reference in the FCF
3. Have its own FCF that controls its axis or centerplane
4. Have a common higher order datum reference letter in its FCF and the FCF where the rule is being considered

Virtual Condition

For Secondary and Tertiary Datum References

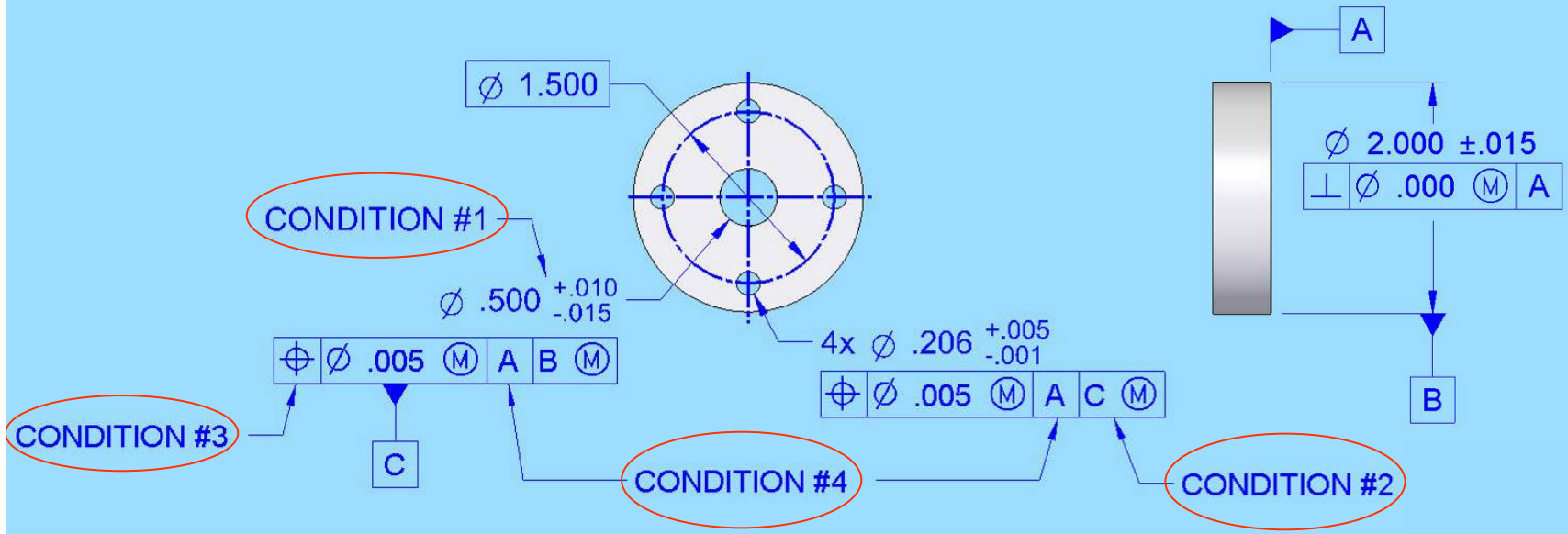

What is X Min. ?

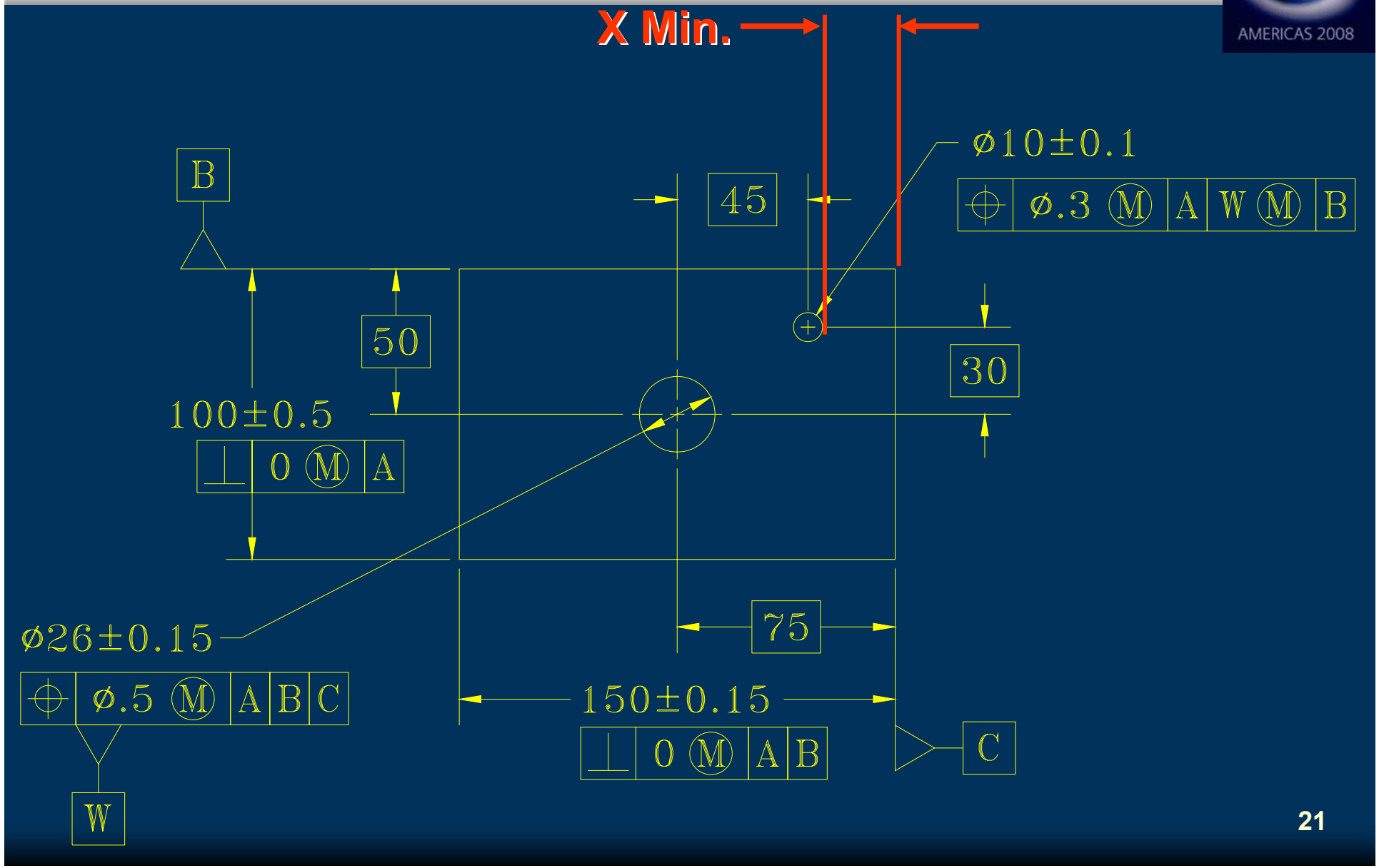
X Min.
B
45
ø10±0.1
ø.3 M A W M B
50
30
100±0.5
0 M A
ø26±0.15
ø.5 M A B C
75
150±0.15
0 M A B
C
W

Start by Visualizing a Gauge That Checks the ø26 ±0.15 Hole

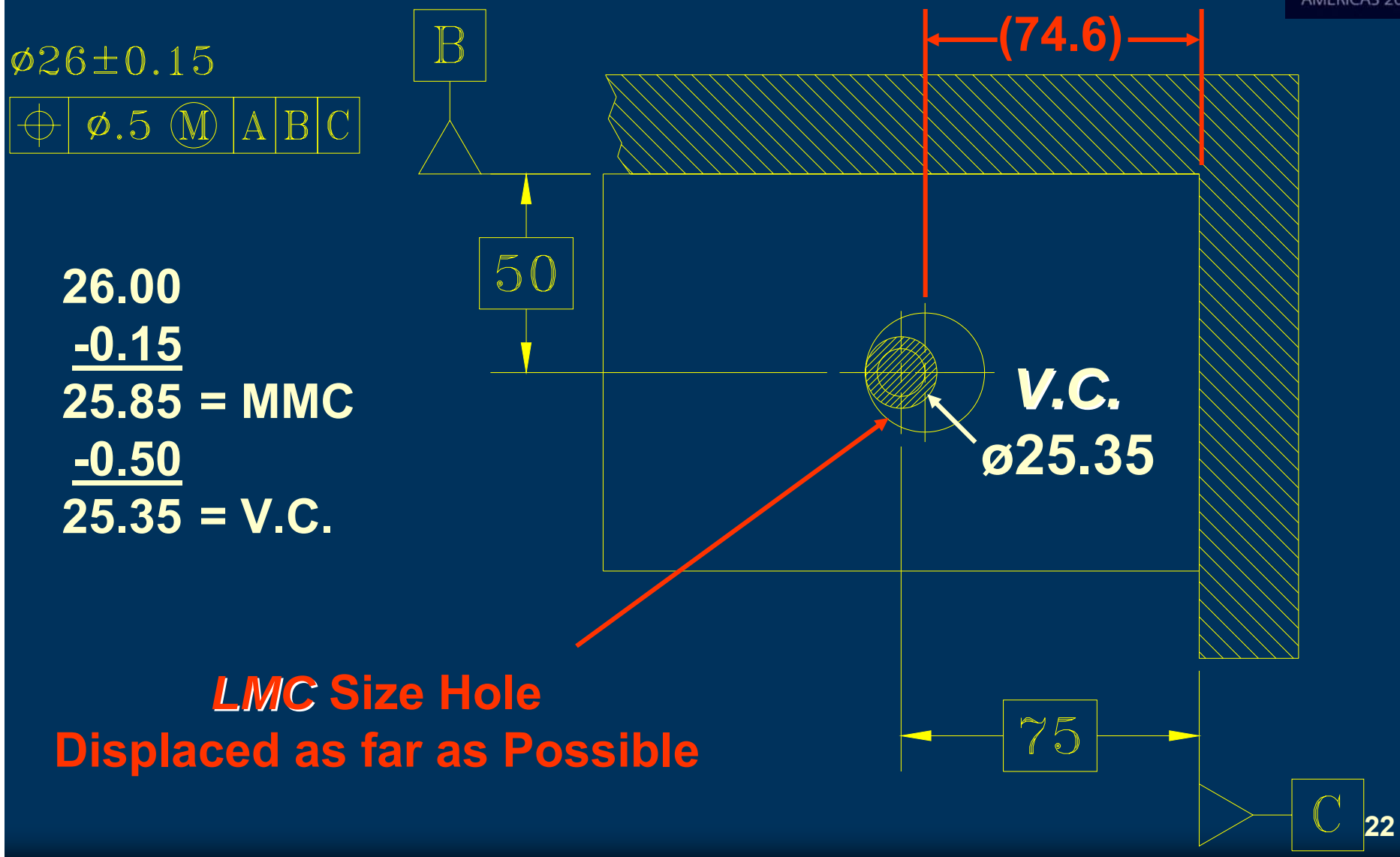

26.00
-0.15
25.85 = MMC
-0.50
25.35 = V.C.

LMC Size Hole
Displaced as far as Possible

Then Let's Visualize a Gauge That Checks the ø10 ±.1 Hole

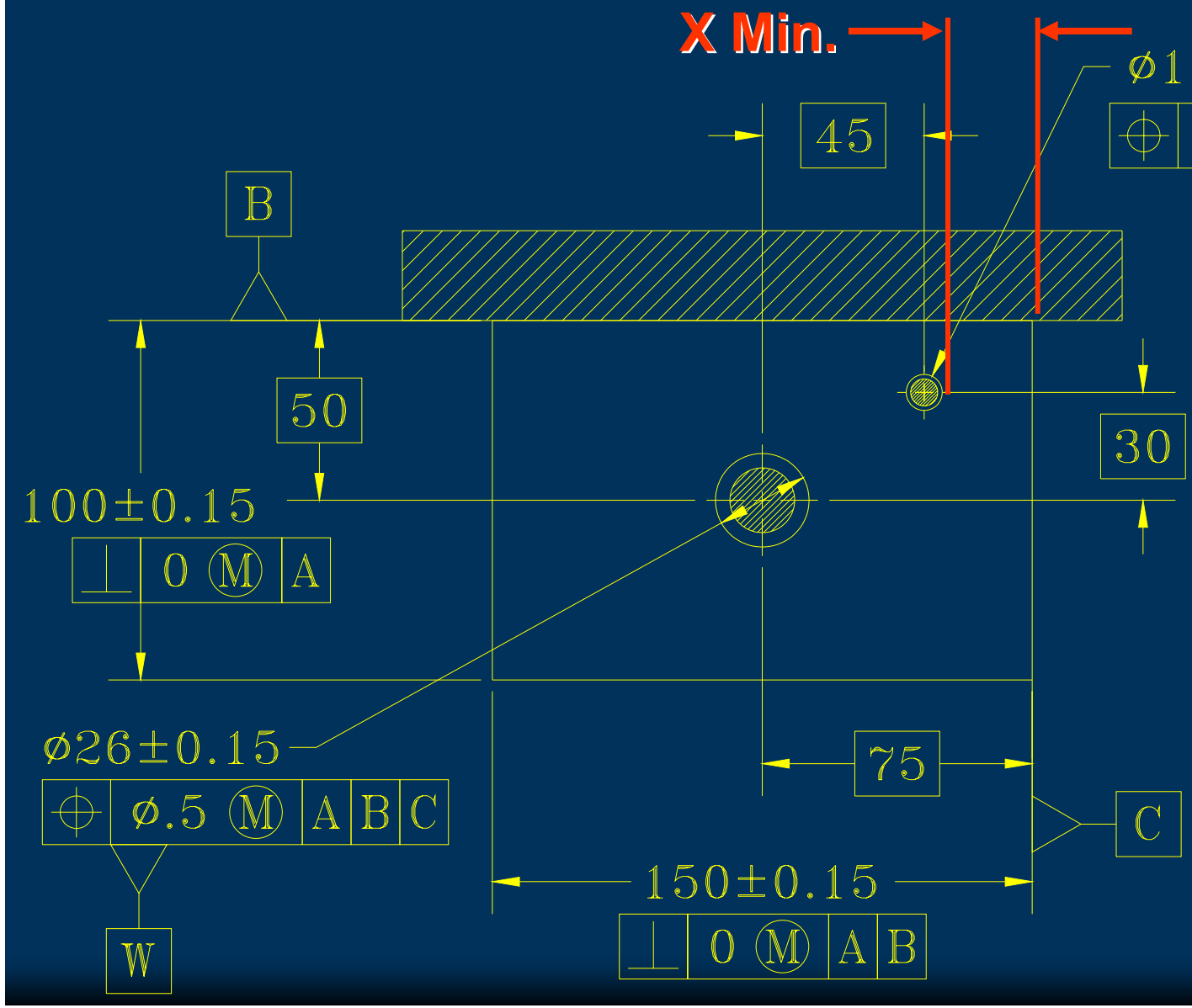

10.00
-0.10
9.90 = MMC
-0.30
9.60 = V.C.

26.00
-0.15
25.85 = MMC
-0.50
25.35 = V.C.

LMC Size Hole is 74.6 From the Wall "Worst Case" (First Gauge)

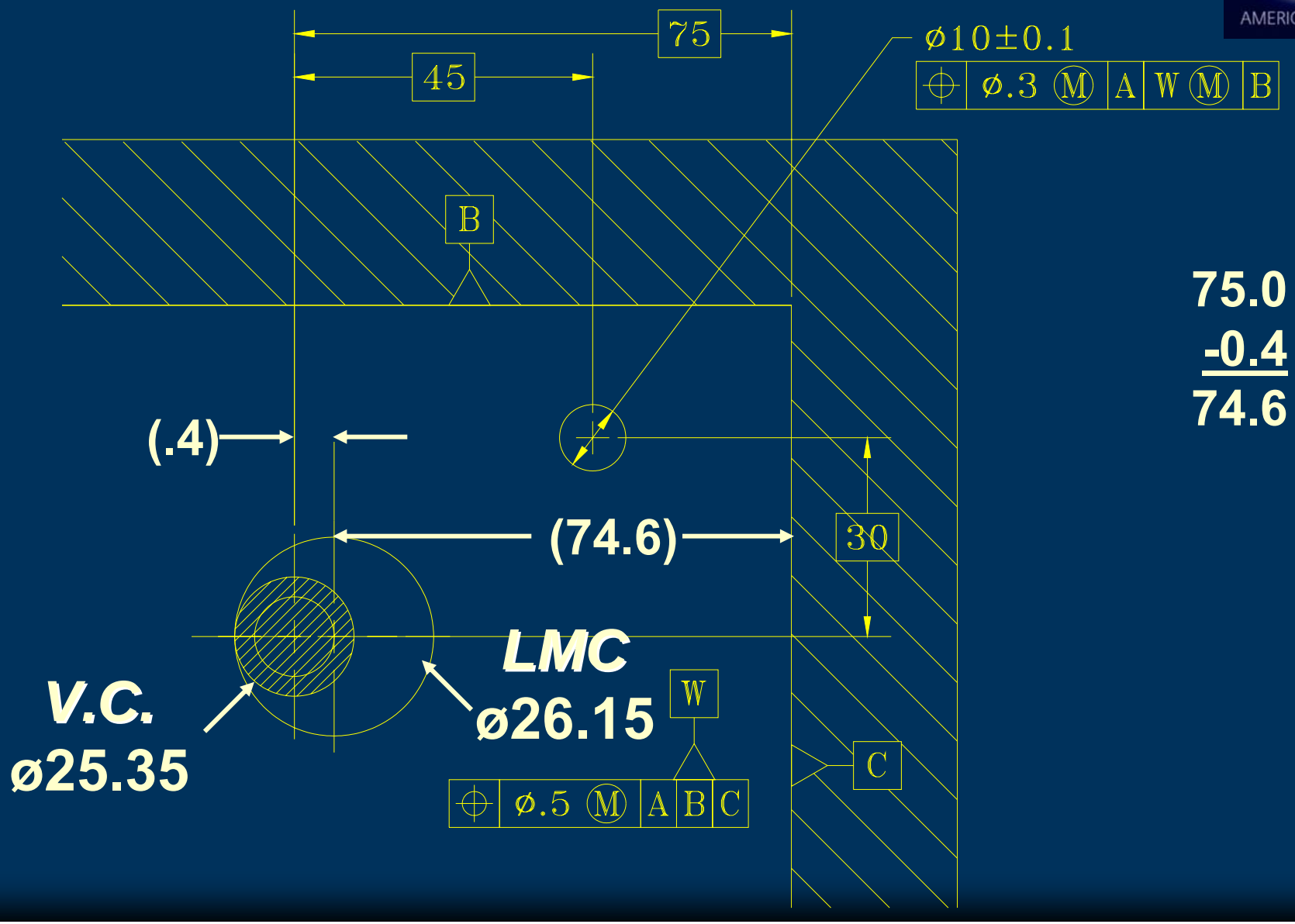

75.0
-0.4
74.6

The Same Part on the Second Gage and Shift the Gage to its "Worst Case"

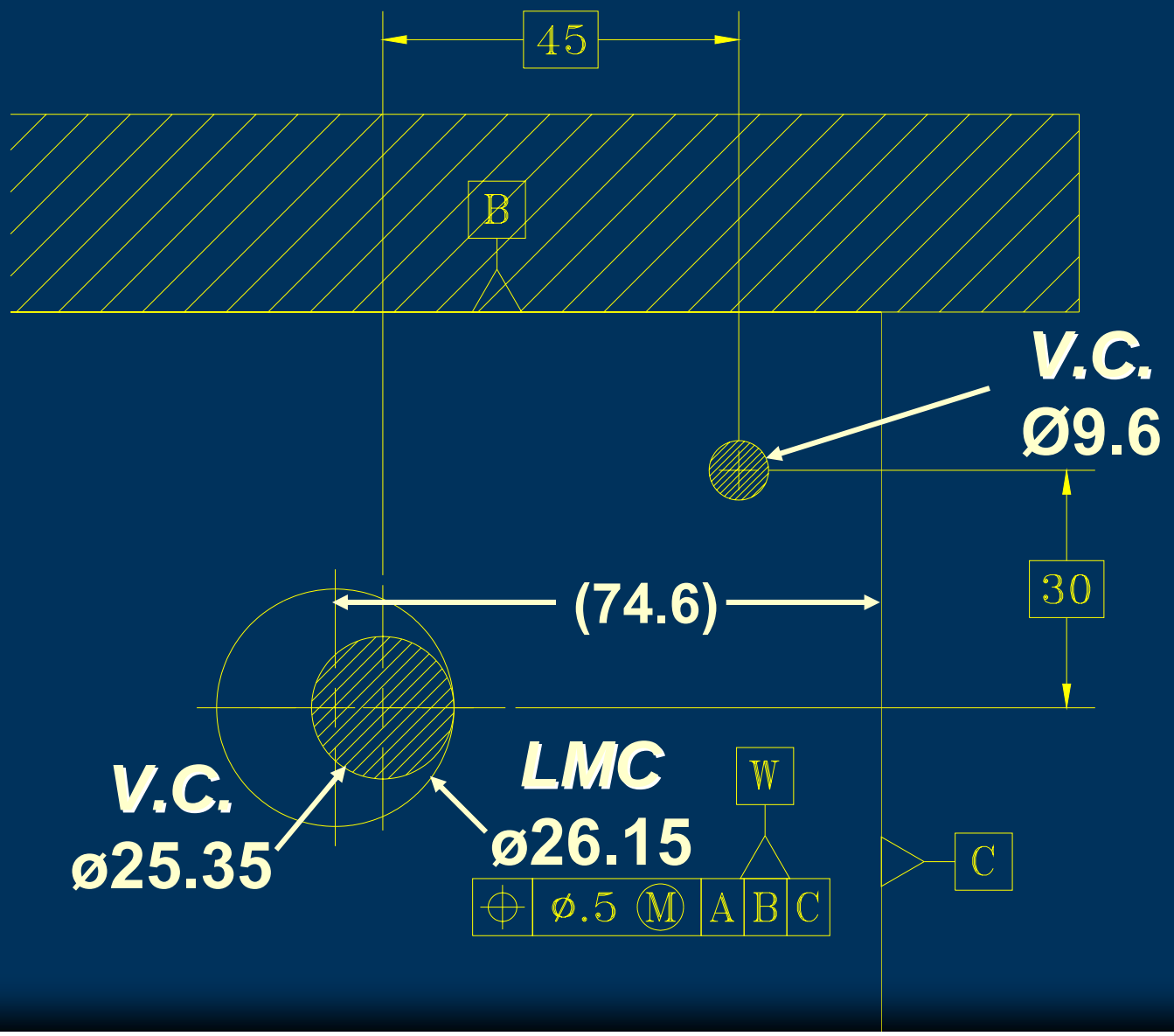

Now Place the Small Hole in its Worst Case Position

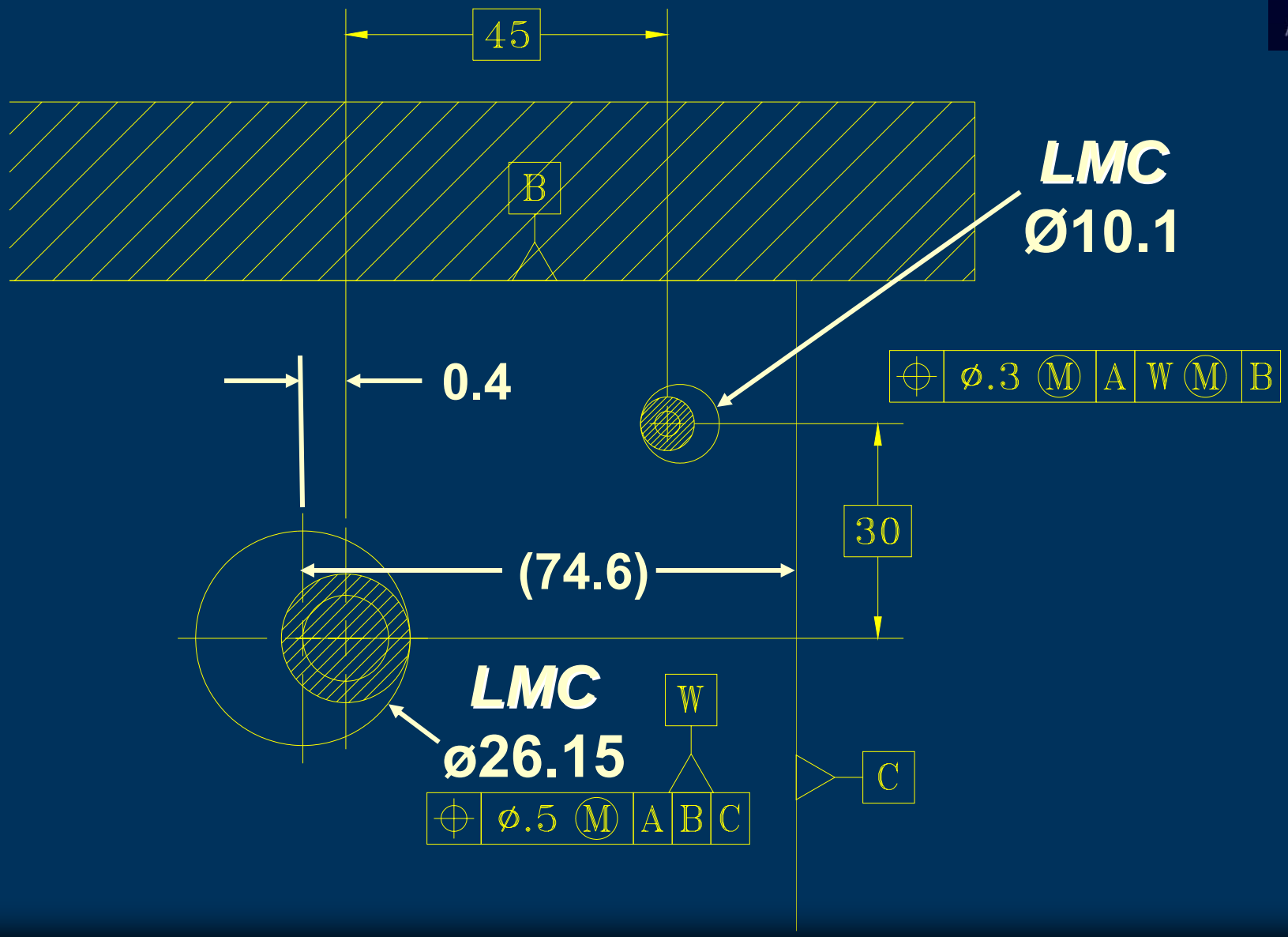

Include the Datum Feature C Form Error and Do the Math!!

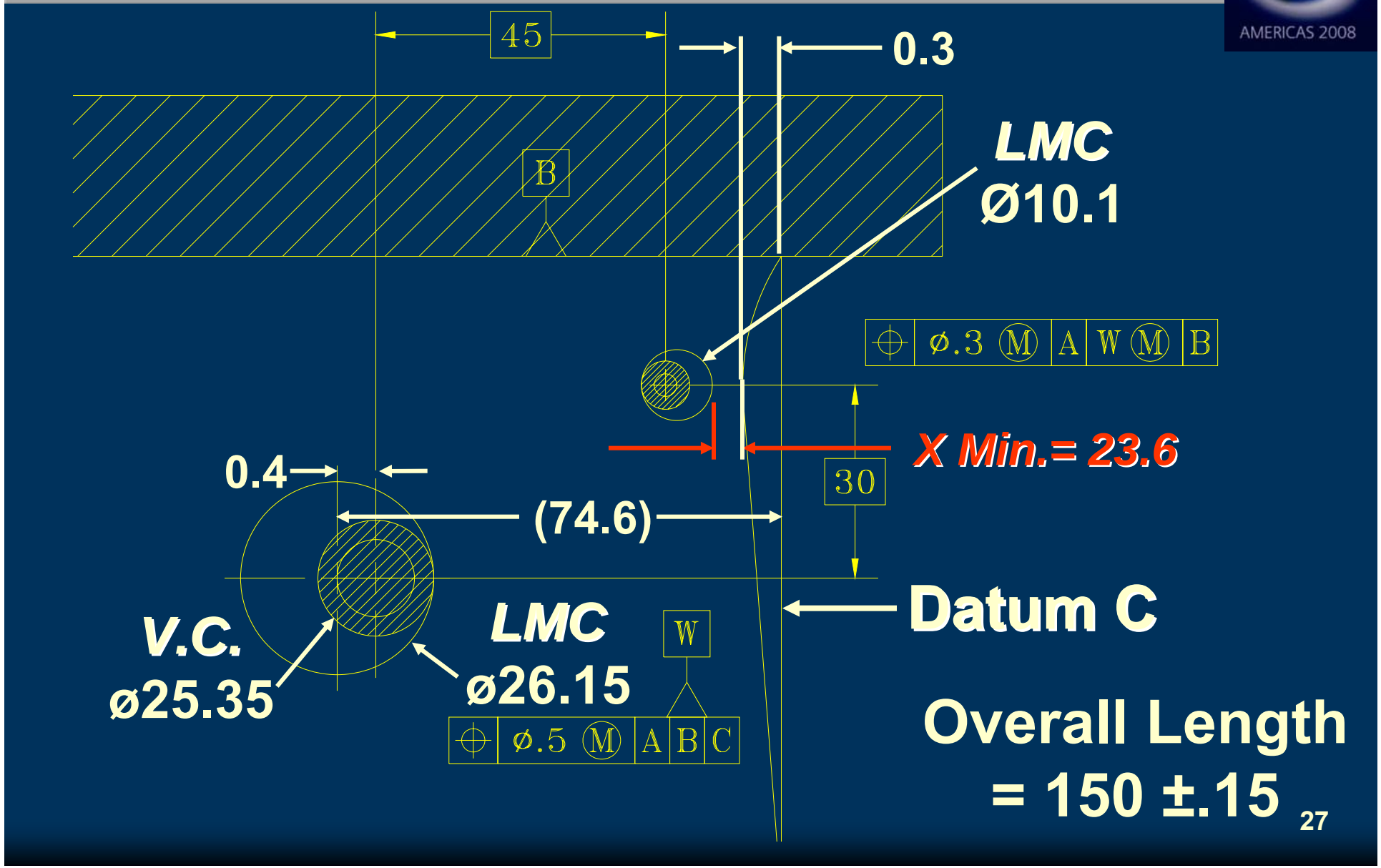

Now, With an Orientation Refinement, What is X Min. ?

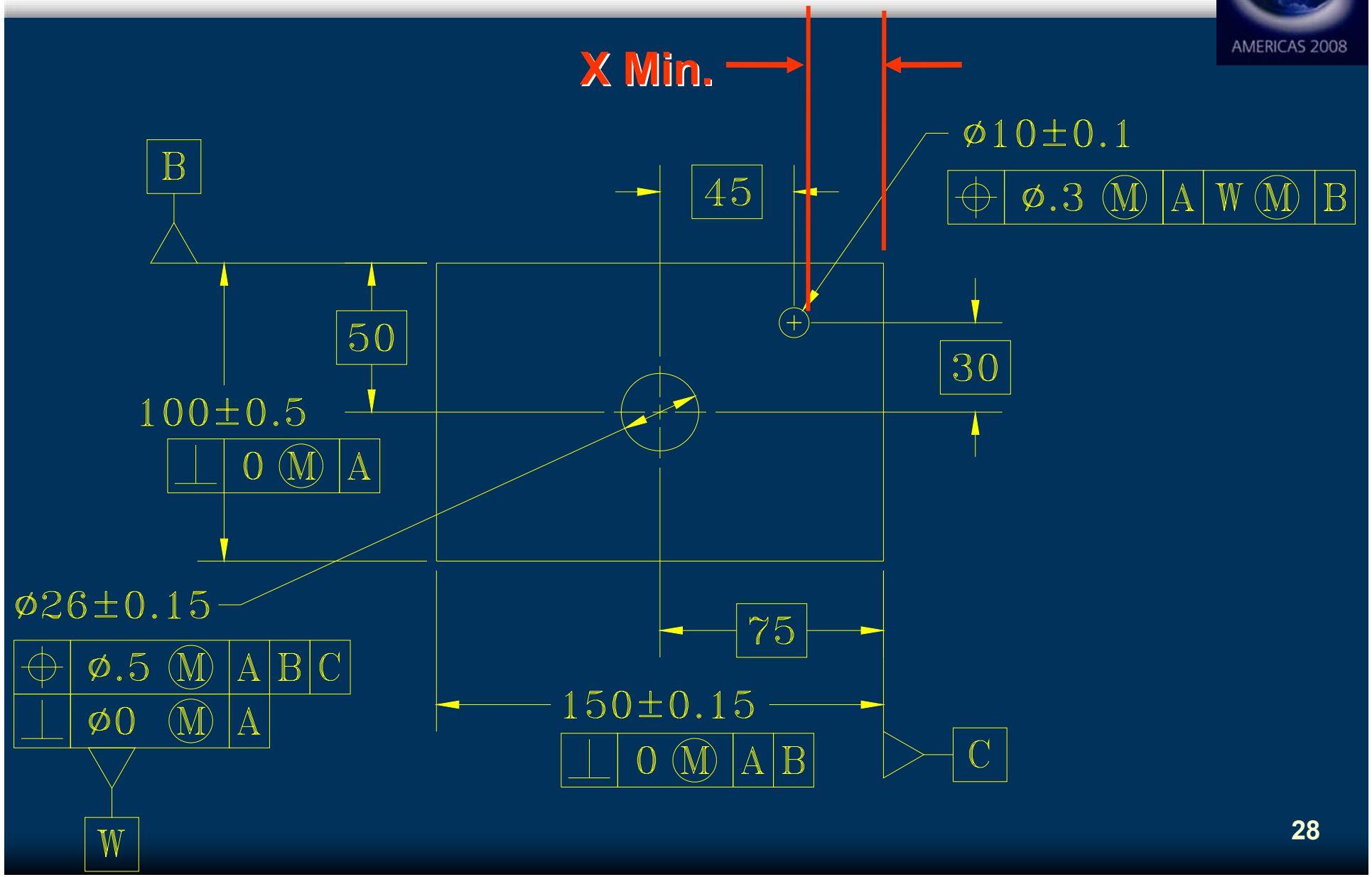

Same Original Gauge to check the *Location* of the Larger Hole

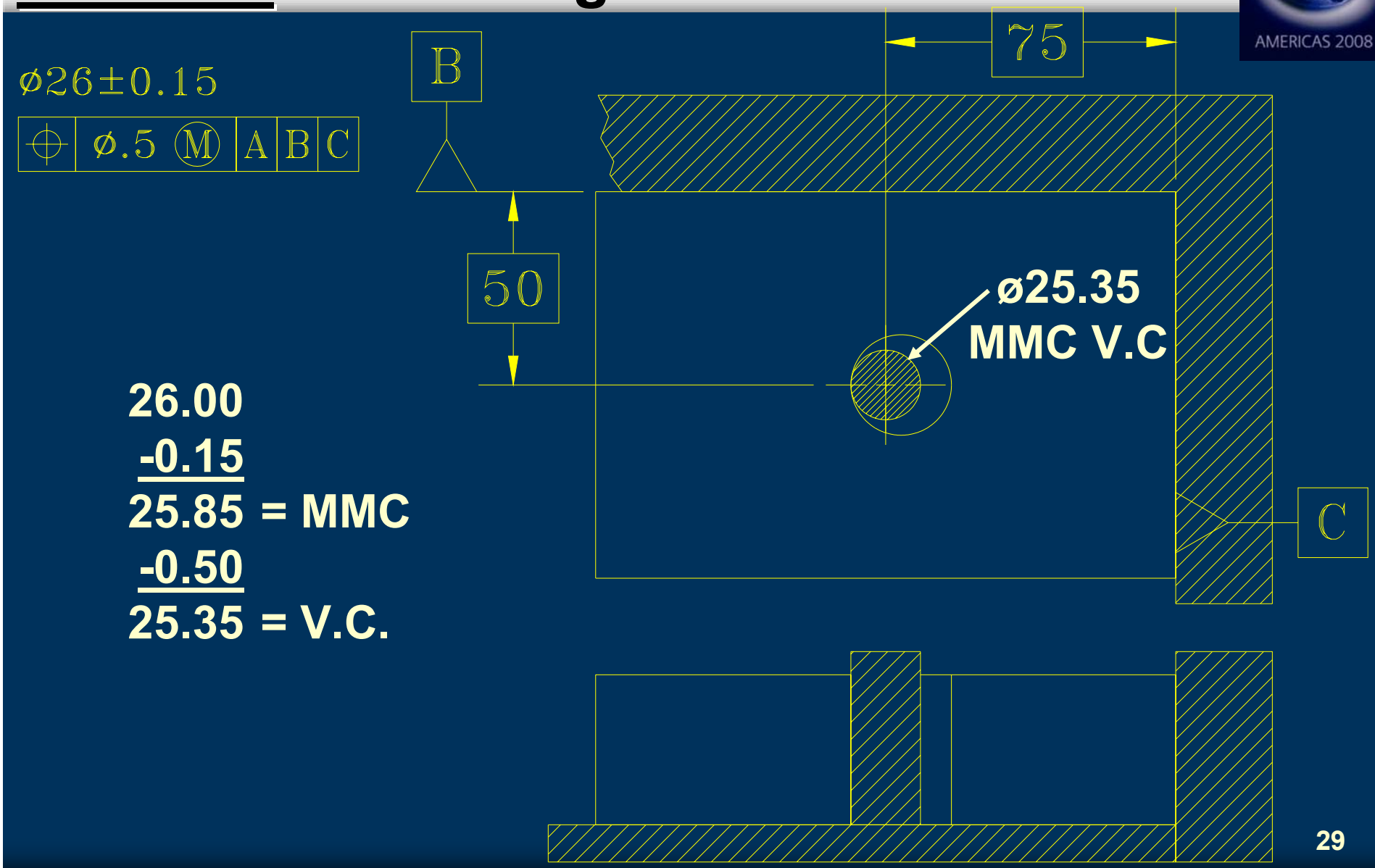

26.00
-0.15
25.85 = MMC
-0.50
25.35 = V.C.

The *Location-Constrained AME* must be ≥ to the *Location*-Constrained V.C.

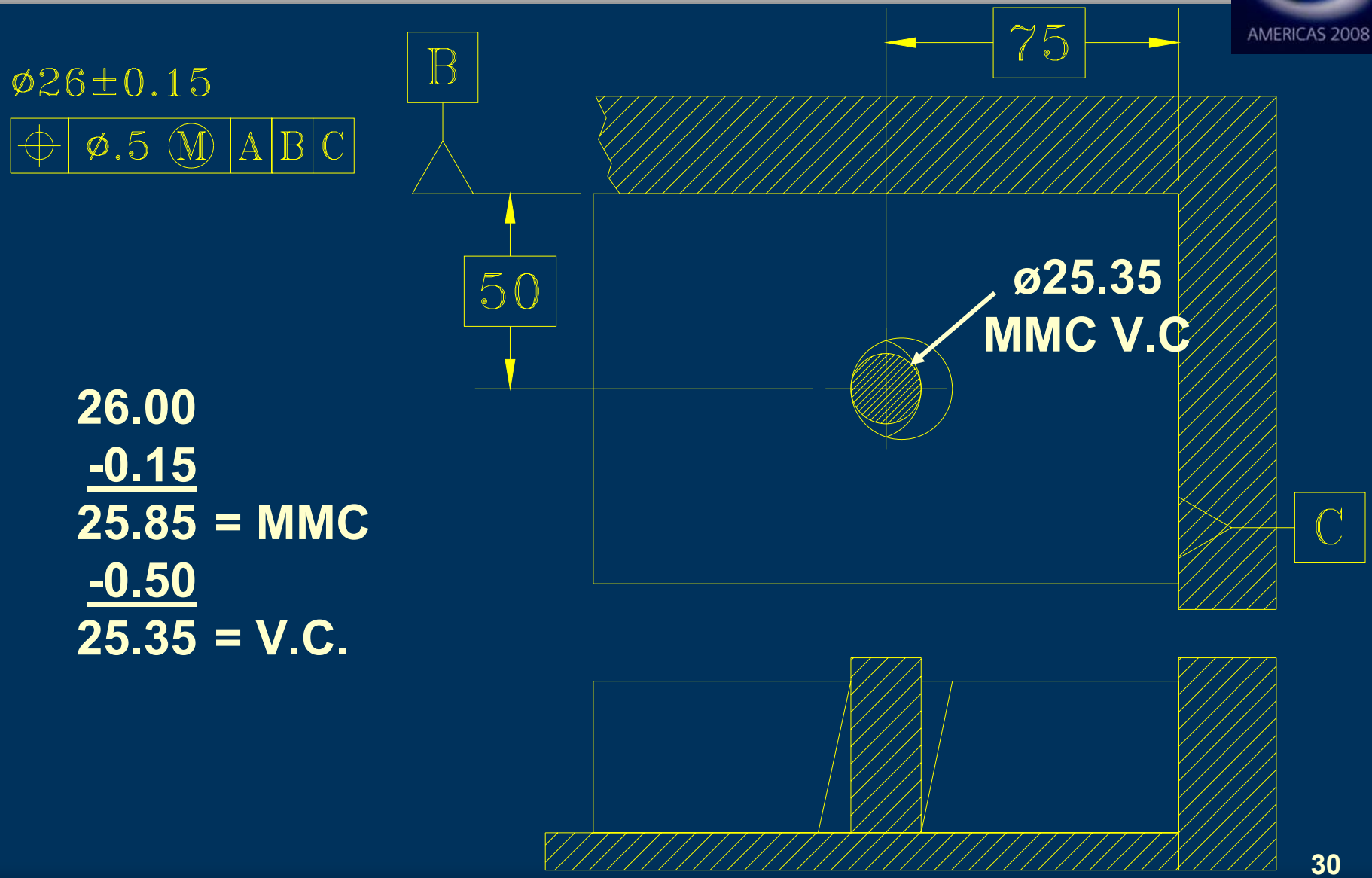

26.00
-0.15
25.85 = MMC
-0.50
25.35 = V.C.

But… What About This Orientation Refinement??

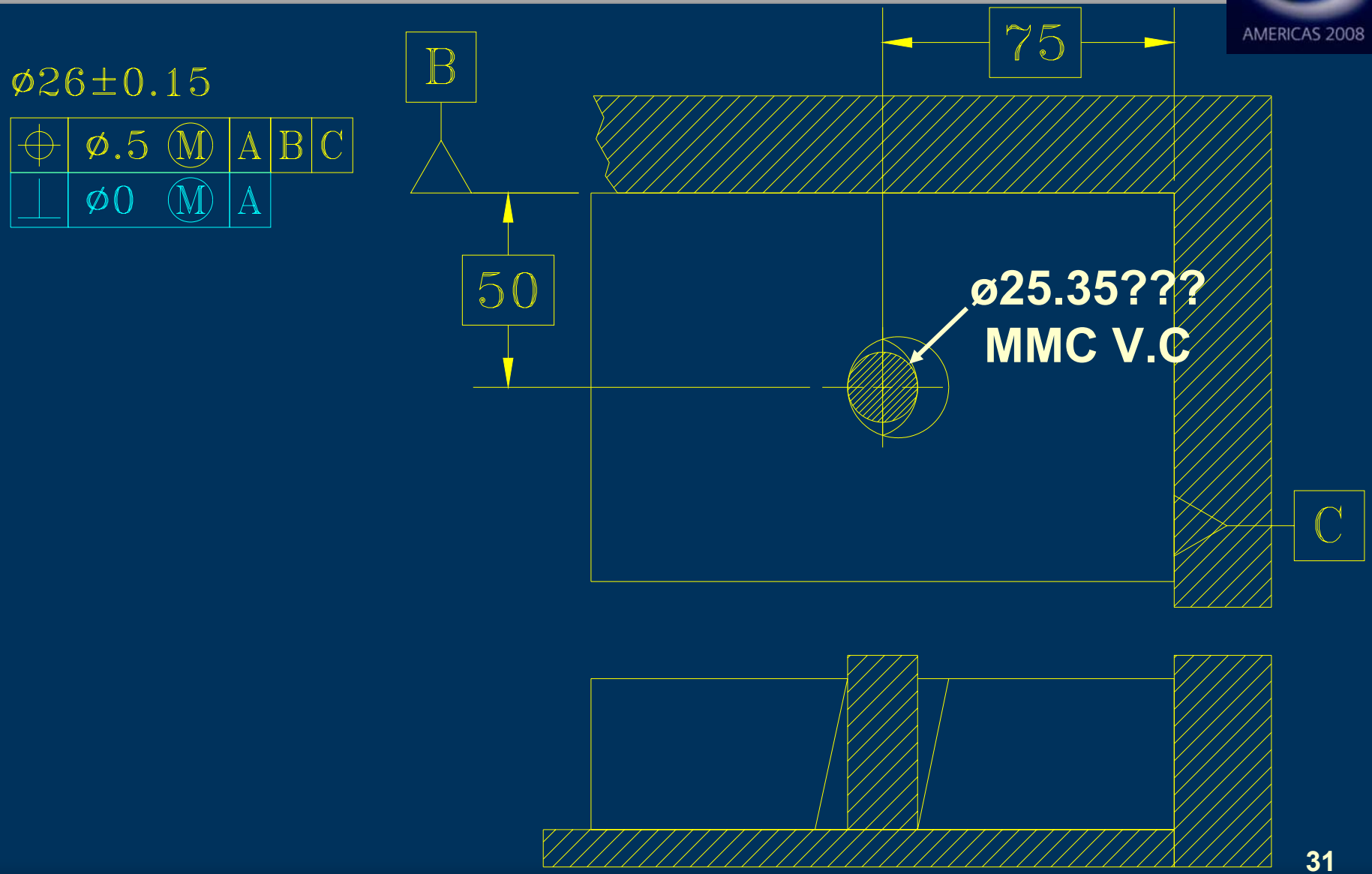

The *Orientation-Constrained AME* must be ≥ to the *Orientation-Constrained V.C.*

ø26±0.15

⊕	ø.5 Ⓜ	A	B	C
⊥	ø0 Ⓜ	A		

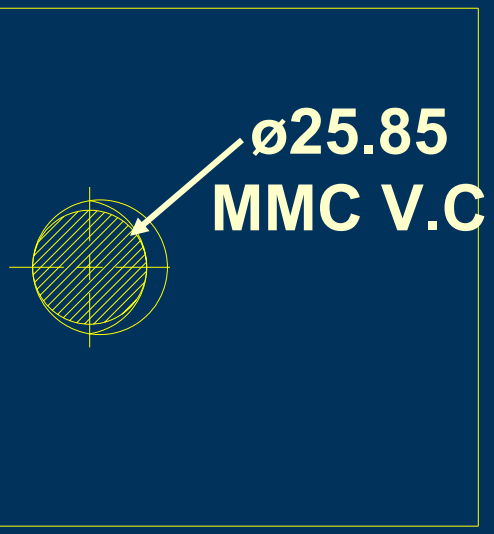

26.00
-0.15
25.85 = MMC
-0
25.85 = V.C.

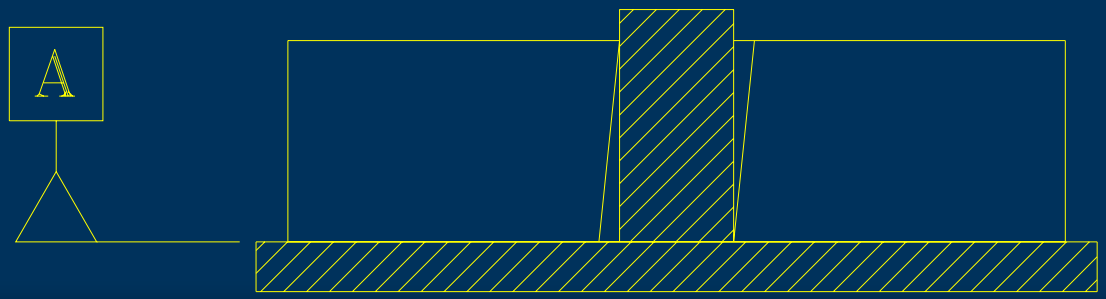

The Worst-case *Location* of the Datum Feature W Hole is the Same as Before

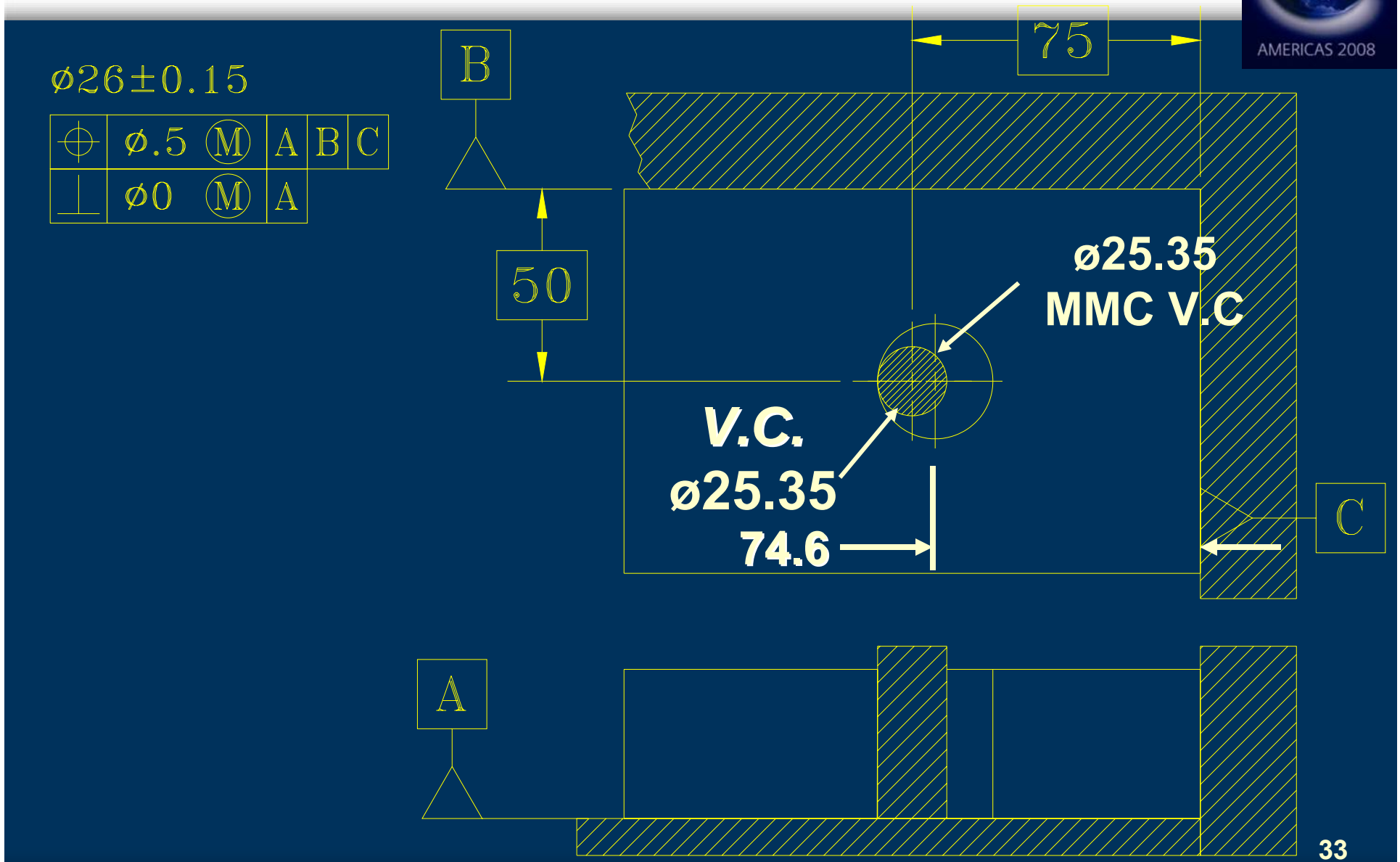

The Gauge to Check the Small Hole Now has an *Orientation* Constrained. V.C.

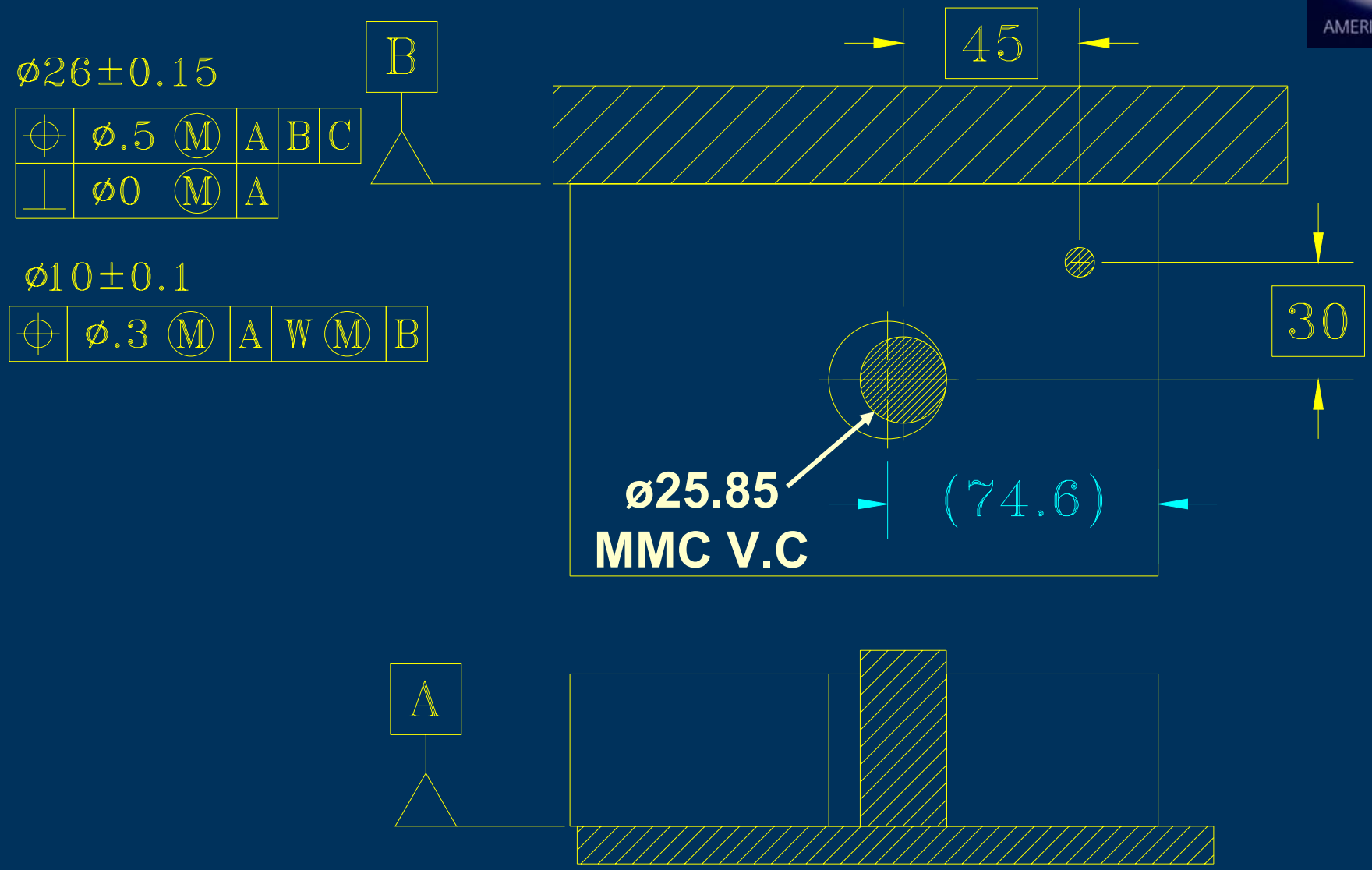

With Everything in its Worst Case Condition

Do The Math!

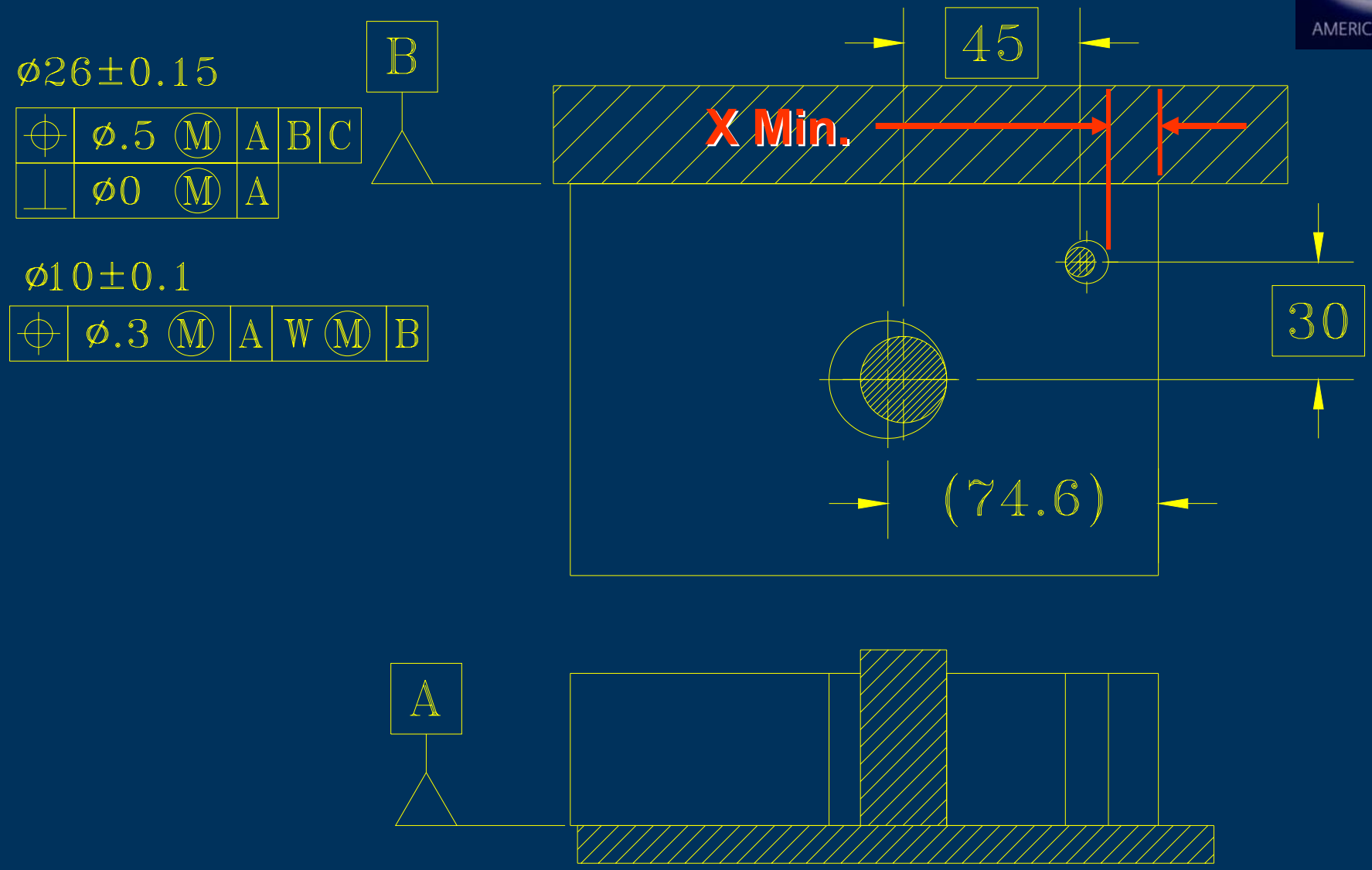

– (10.1) + ½(9.6) – 45 + ½(25.85) – ½(26.15) + 74.6 – .3 =
– 10.1 + 4.8 – 45 + 12.925 – 13.075 + 74.6 – .3 = *23.85*

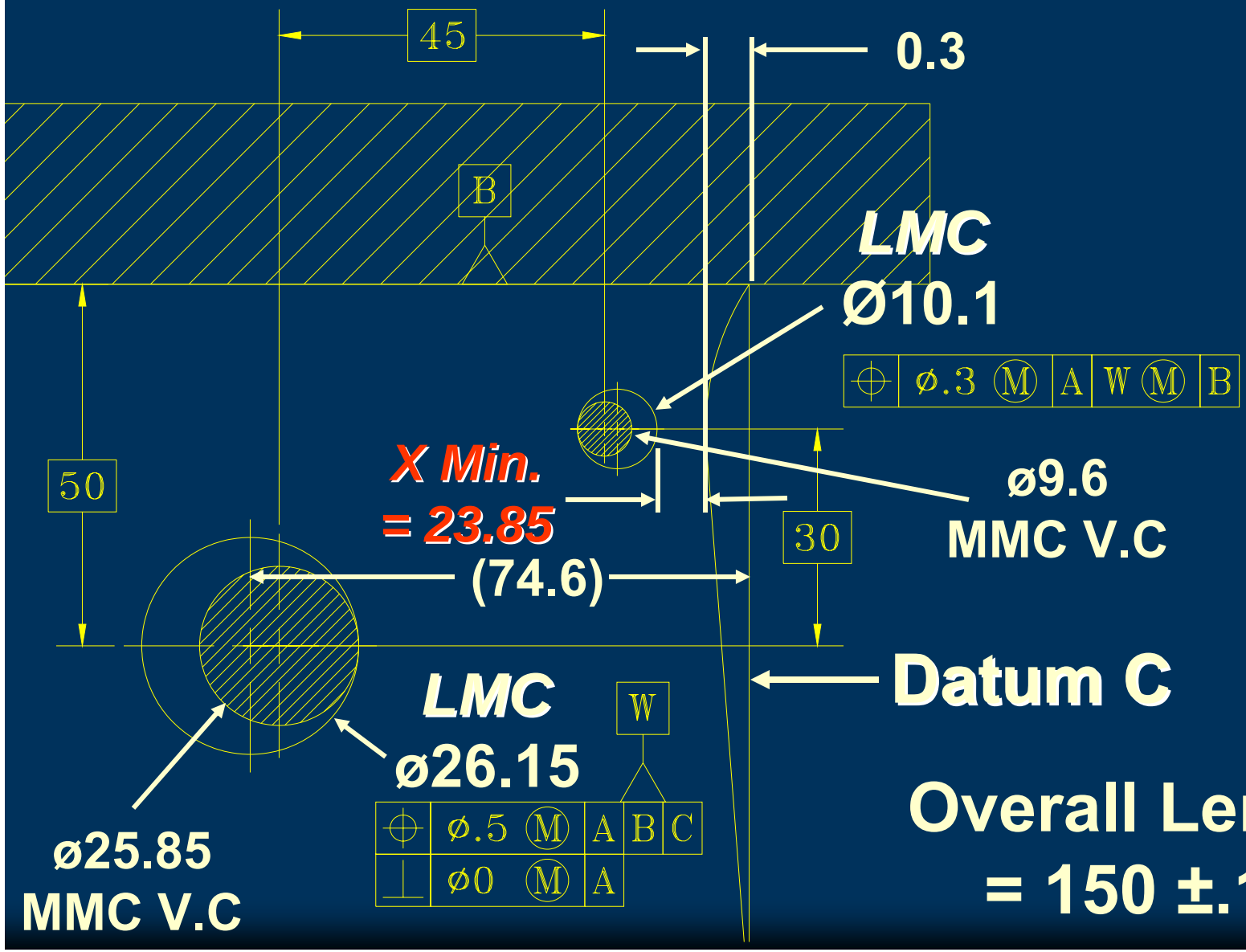

Overall Length
= 150 ±.15

VisVSA Analysis
Datum W Referenced At RFS

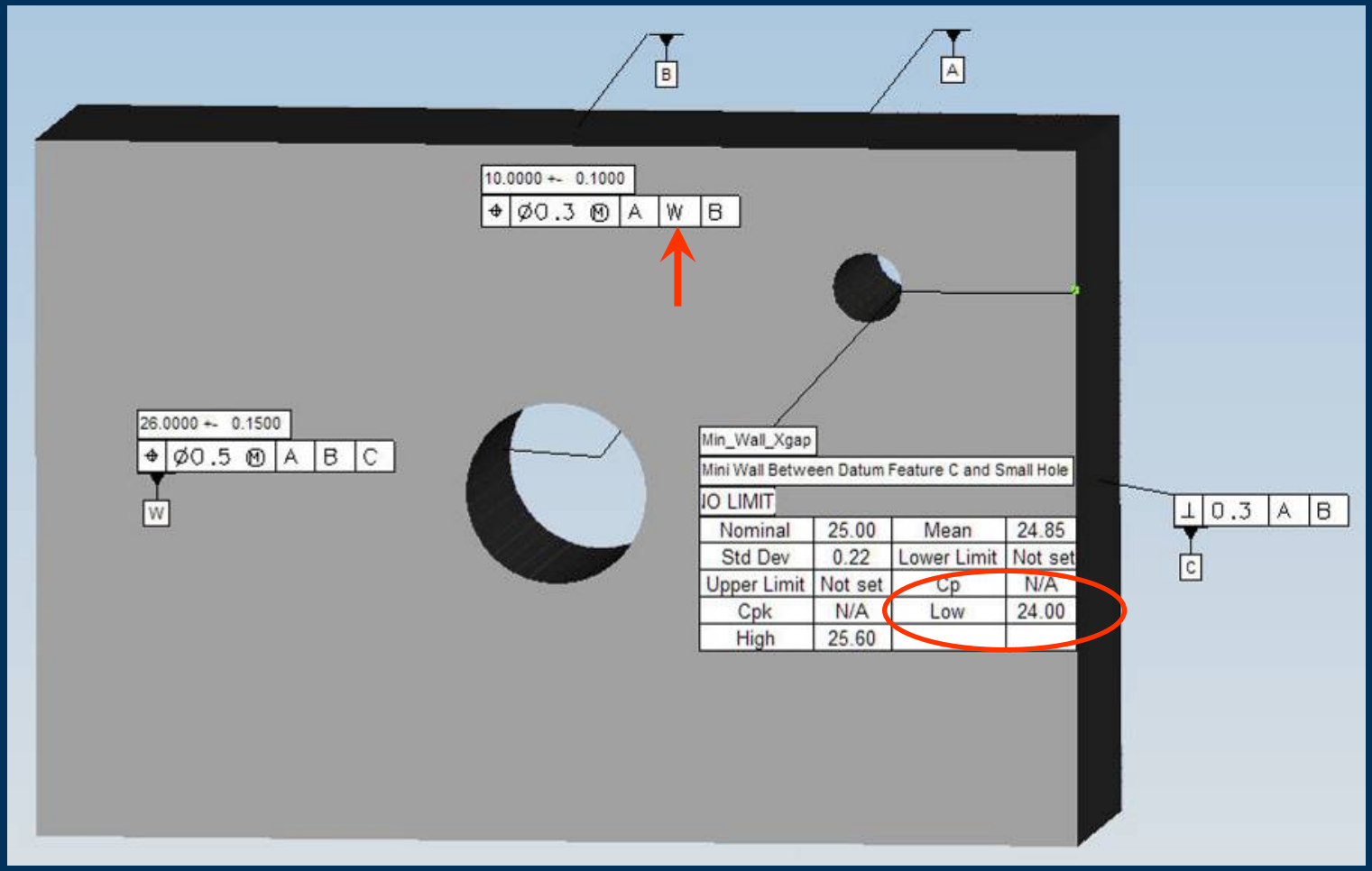

- VisVSA Correctly Calculates Minimum Wall When "Datum Shift" Is Not Available

Datum W Referenced With MMC Modifier (Virtual Condition)

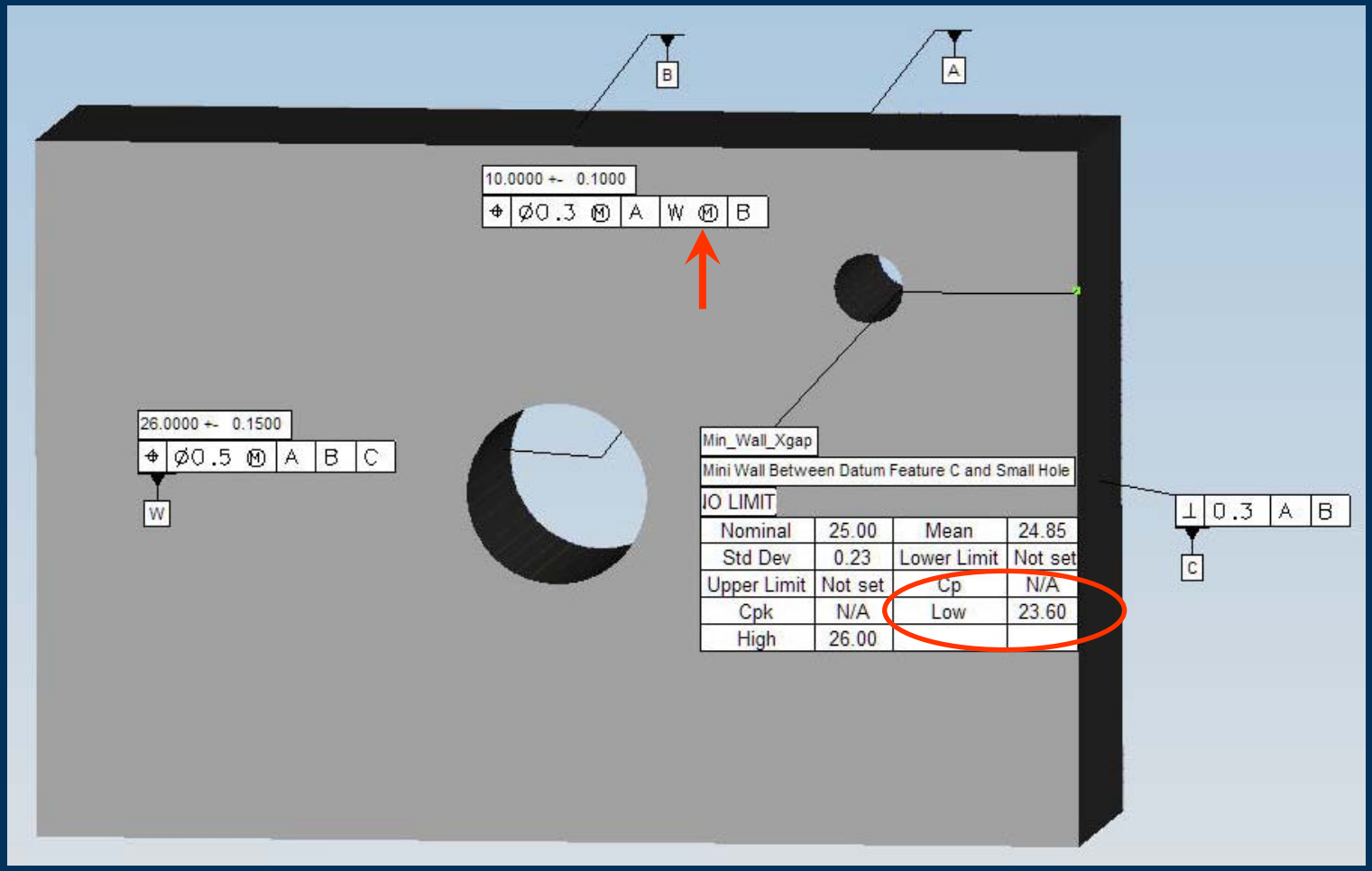

- VisVSA Correctly Calculates Minimum Wall When "Datum Shift" Is Available

Note: There Is No Orientation Virtual Condition <u>Refinement</u> Of Datum Feature W

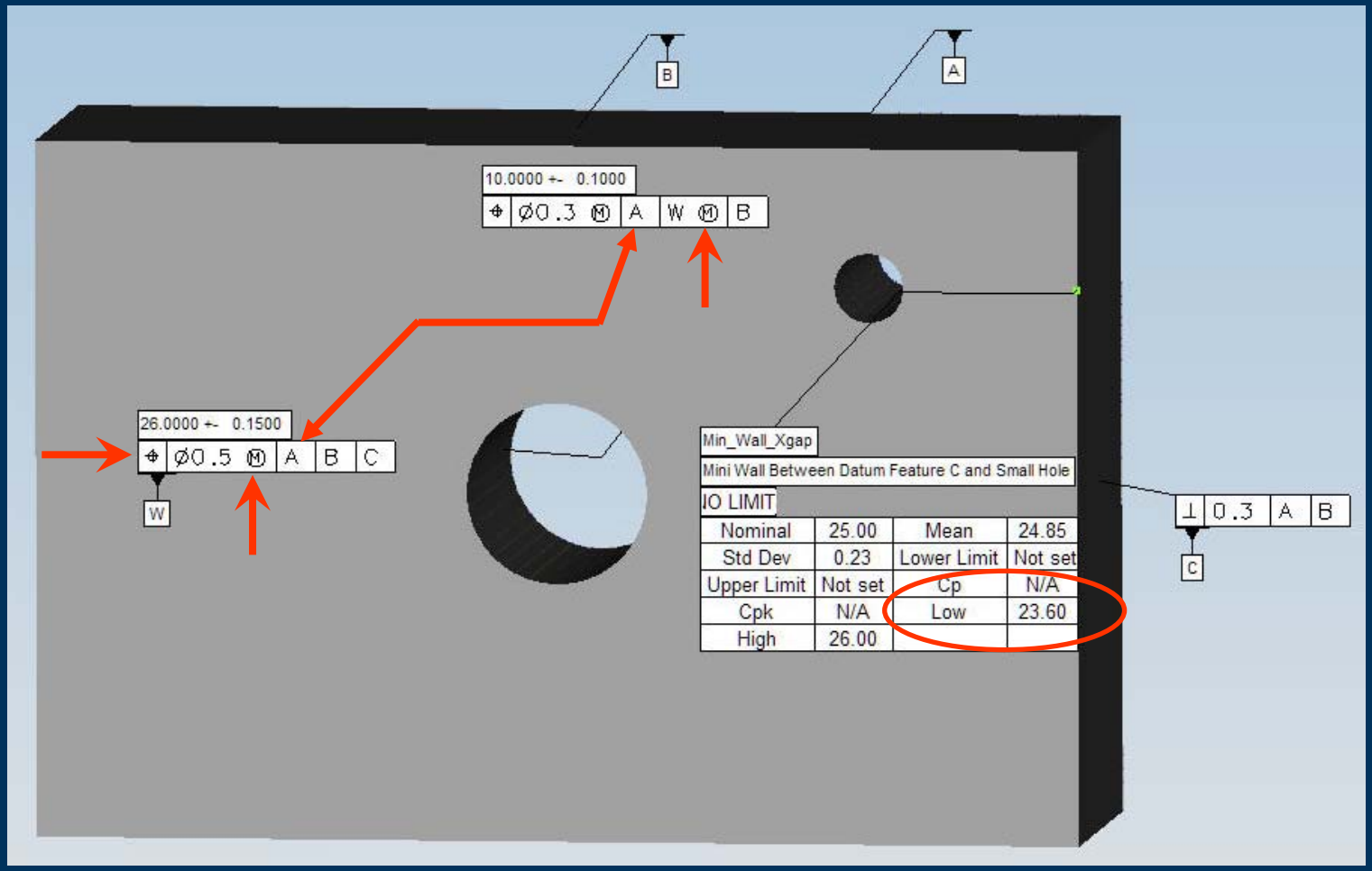

- VisVSA Correctly Applies Datum Shift
- Actual Mating Envelope Departs From **<u>A</u>** Virtual Condition

Orientation Refinement of Datum Feature W Using Perpendicularity

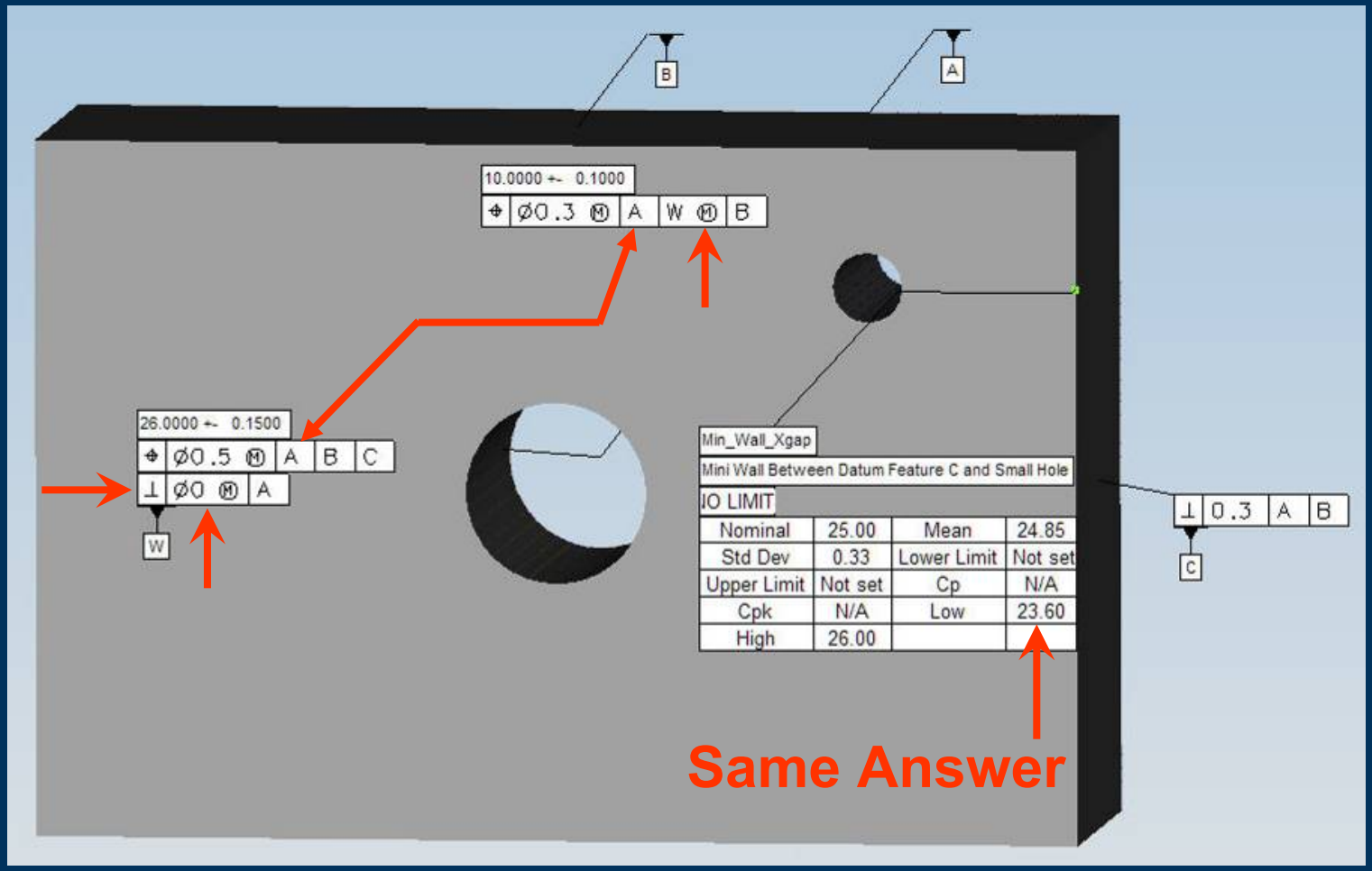

- VisVSA <u>Does Not</u> Correctly Apply The Datum At Virtual Condition Rule – PR5885725

The Workaround Is To Apply The Orientation Refinement Using Position

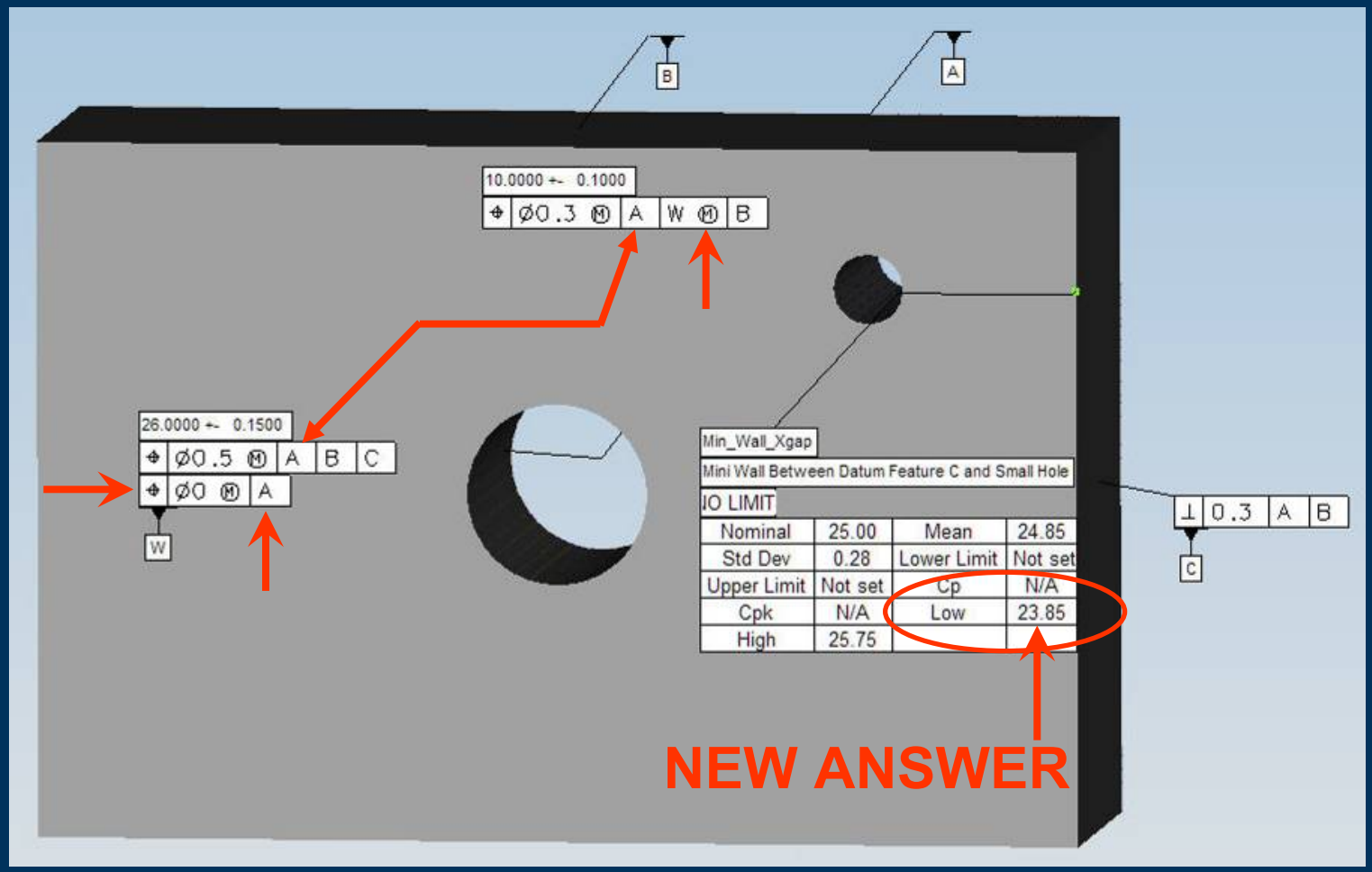

- VisVSA Now Applies The Datum At Virtual Condition Correctly, Including The Application Of The Orientation Virtual Condition.

UGS CONNECTION

AMERICAS 2008

PLM WORLD®
The Voice of Siemens PLM Software Users Worldwide

Siemens PLM Software

SIEMENS

Thank You
Applied Geometrics, Inc.

Mark Foster, markfoster@GDandT.com

Norm Crawford, norm.crawford@GDandT.com