UGS CONNECTION

AMERICAS 2008

PLM WORLD®
The Voice of Siemens PLM Software Users Worldwide

Siemens PLM Software

SIEMENS

Finite Element Analysis for Undergraduate Juniors

Paul Zang
Yaomin Dong
Kettering University
Flint, MI

Kettering University

- Approximately 2000 Undergraduate Students
- 85 % ME, EE, or IME
- 100% Co-op from Freshman 1
- 3 Months School, 3 Months Work
- Quarter Calendar (12 weeks) Semester Credit

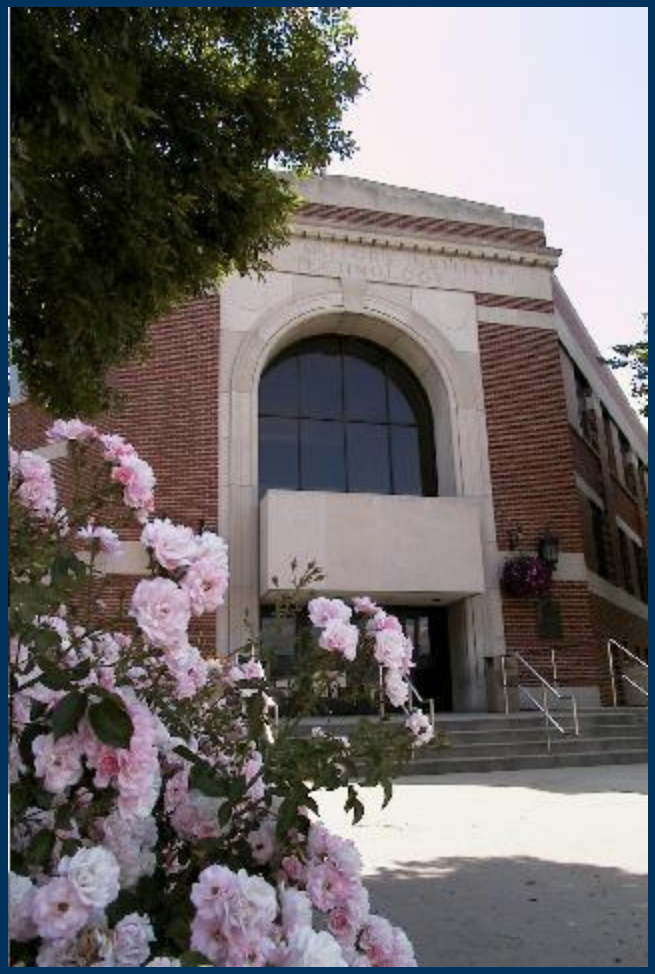

MECH-300
Computer Aided Engineering

Computer Aided Engineering (CAE)

→Prerequisites by Topic

→NX Modeling, Drafting and Assemblies
→Statics (Forces and Reactions)
→Mechanics of Materials (Stress and Deflection)

→The CAE course in Junior 1 is a prerequisite for Machine Design and the ME Capstone Design course.

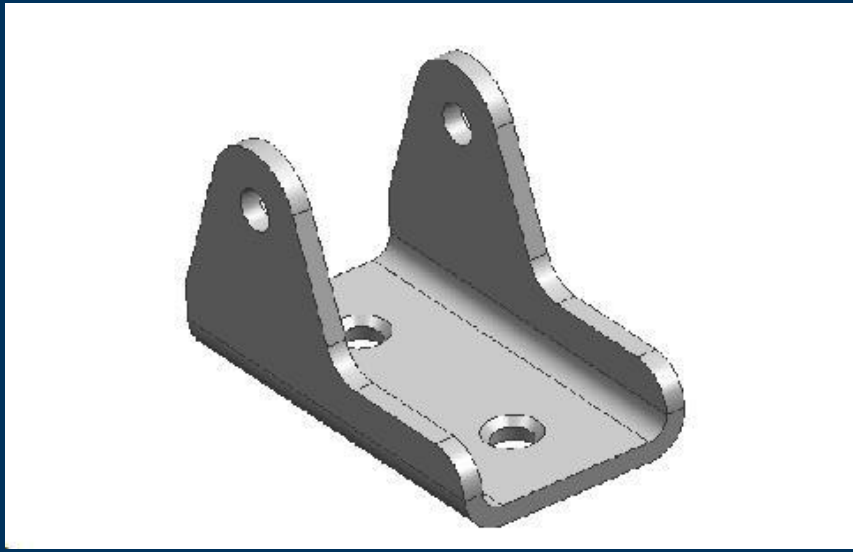

MECH-300
Computer Aided Engineering

KISS

→MOM Beam Analysis

→Cantilevered Beam, Concentrated Force at end

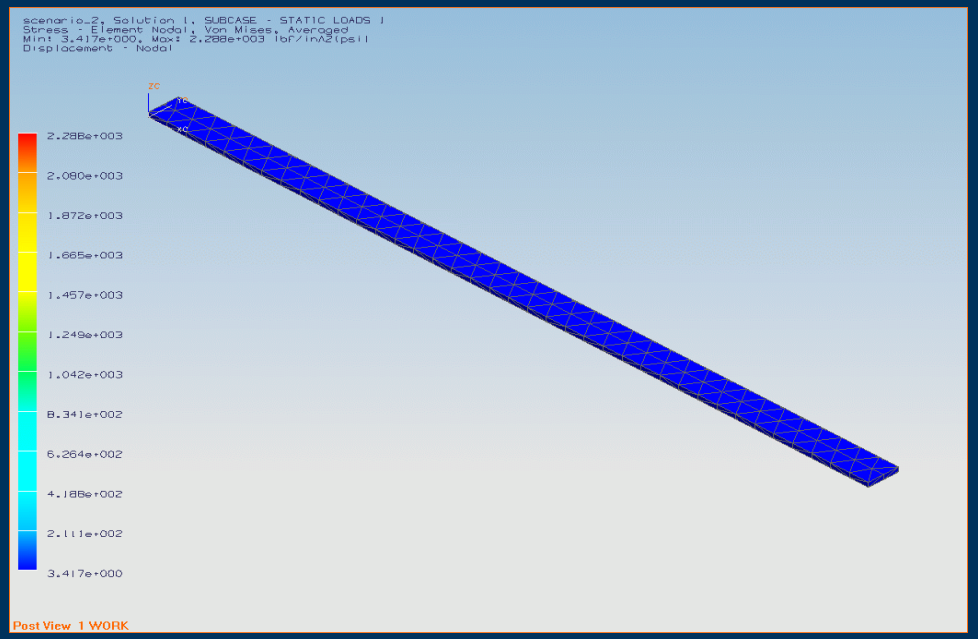

MECH-300
Computer Aided Engineering

	Experimental	Theory	FEA
Max Displacement	1.75”	2.1”	2.096”
Max Stress	N/A	4096 psi	4048 psi

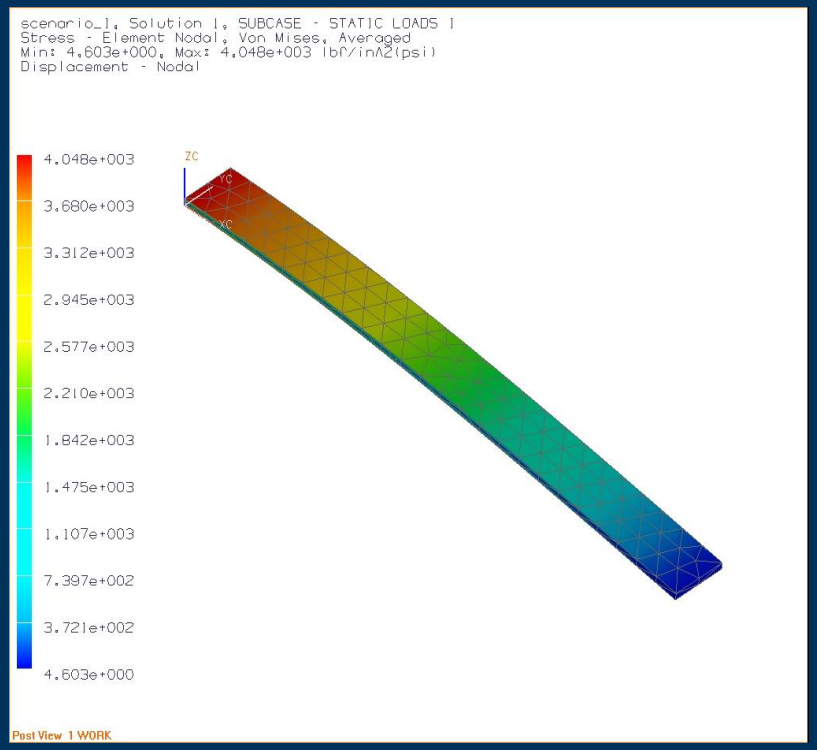

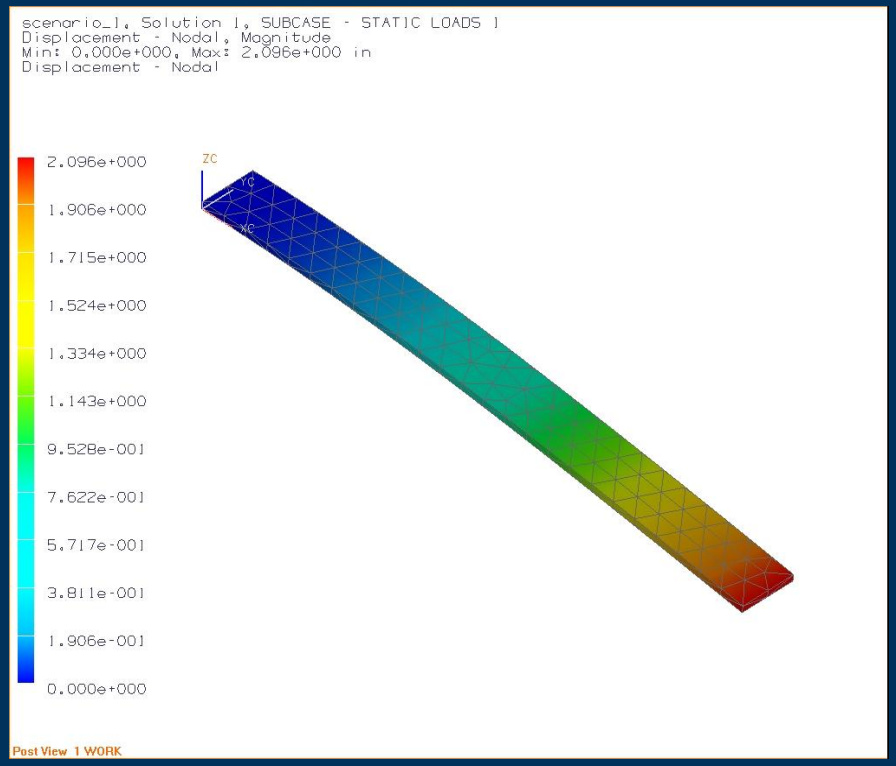

MECH-300
Computer Aided Engineering

Final Project from DAU

→ Parametric Modeling

→ FEA

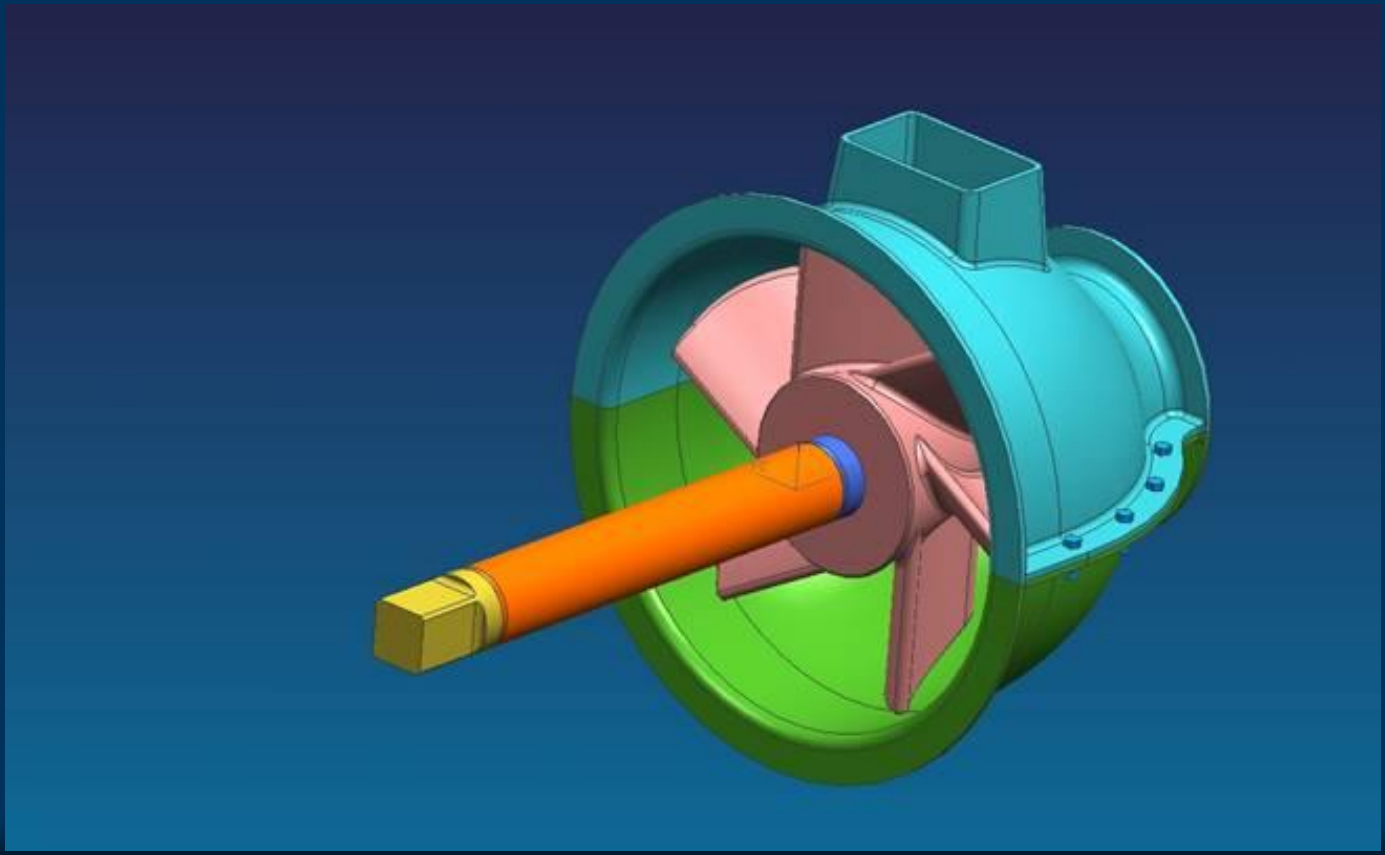

MECH-300
Computer Aided Engineering

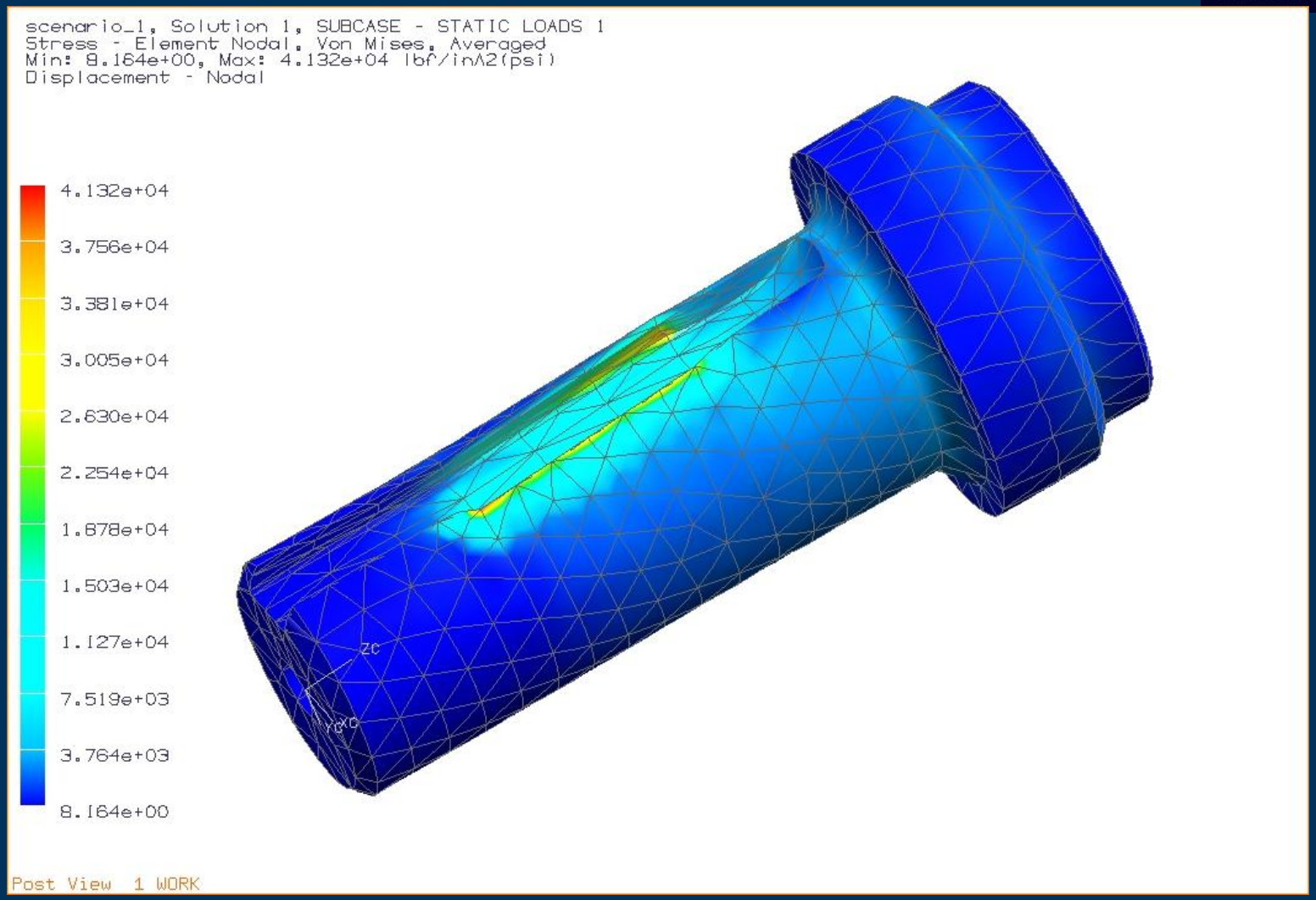

MECH-300
Computer Aided Engineering

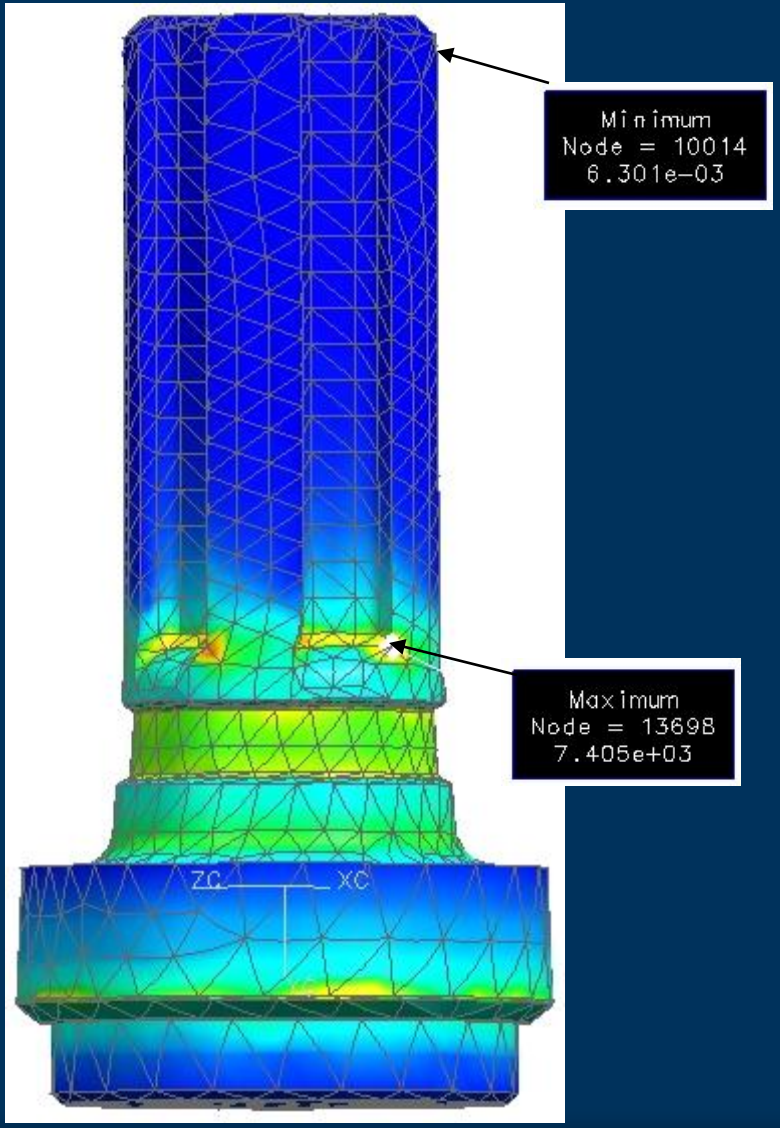

Spline re-design with relief

Conclusions

- Applied FEA can be taught in Junior year
- MOM is a hard Prerequisite

QUESTIONS??

UGS CONNECTION

AMERICAS 2008

PLM WORLD®
The Voice of Siemens PLM Software Users Worldwide

Siemens PLM Software

SIEMENS

Paul Zang and Yaomin Dong
Kettering University

pzang@kettering.edu
ydong@kettering.edu